THE UNITED REPUBLIC OF TANZANIA
NATIONAL EXAMINATIONS COUNCIL
CERTIFICATE OF SECONDARY EDUCATION EXAMINATION

035

ENGINEERING SCIENCE

(For Both School and Private Candidates)

Time: 3 Hours **Tuesday, 07th November 2017 a.m.**

Instructions

1. This paper consists of sections A, B and C with a total of **sixteen (16)** questions.
2. Answer **all** questions in sections A and B, and **three (3)** questions from section C.
3. Calculators, Cellular phones and any unauthorized materials are **not** allowed in the examination room.
4. Write your **Examination Number** on every page of your answer booklet(s).
5. Where necessary, use; $\pi = 3.14$.

SECTION A (10 Marks)

Answer **all** questions in this section.

1. For each of the items (i) – (x), choose the correct answer among the given alternatives and write its letter beside the item number in the answer booklet provided.

(i) Which of the following are the factors to be considered to calculate the energy used by an electrical appliance?
A Voltage and current B Current and time operation C Current and resistance
D Power and time operation E Voltage and time operation.

(ii) Whenever a force of a certain body acts on another body, an equal and opposite force acts on the other body. This statement can exactly be equivalent to the
A first Newton's law of motion. B second Newton's law of motion.
C fourth Newton's law of motion. D third Newton's law of motion.
E Newton's universal gravitational law

(iii) In an experiment to compare the densities of two liquids by means of Hare's apparatus the ratio of the height of a lighter liquid to that of denser liquid is always
A less than one. B greater than one. C equal to one.
D less or equal to one. E equal to the relative density of water.

(iv) Which of the following is a characteristic of a circuit containing resistance in parallel?
A The current in each resistor is the same
B The internal resistance is equal the sum of individual resistances
C The total p.d is equal to the sum of individual p.d(s)
D The total resistance is equal to the sum of individual resistances
E The p.d in each resistance is the same

(v) Doctors do not rush to read the temperature of their patients using clinical thermometer because the thermometers have
A mercury. B constriction. C very clear readings.
D liquids. E bulb at their bottom parts.

(vi) The main factor which affects the speed of a sound wave is
A intensity of sound. B pitch of the sound. C loudness of the sound.
D Properties of the medium. E amplitude of the sound

(vii) In an electric circuit a voltmeter is always connected
A before a resistor. B after a resistor.
C across a resistor. D in parallel with a resistor.
E in series with a resistor.

(viii) Which list among the following represents examples of second class levers?

A Scissors, claw hammer, broom B Wheelbarrow, bottle opener, paper cutter
C Wire cutter, wheelbarrow, spade D Wire cutter, bottle opener, spade
E Tweezers, spade, bottle opener

(ix) Figure 1 shows the motion of a body described in the velocity-time graph. At point A the body was

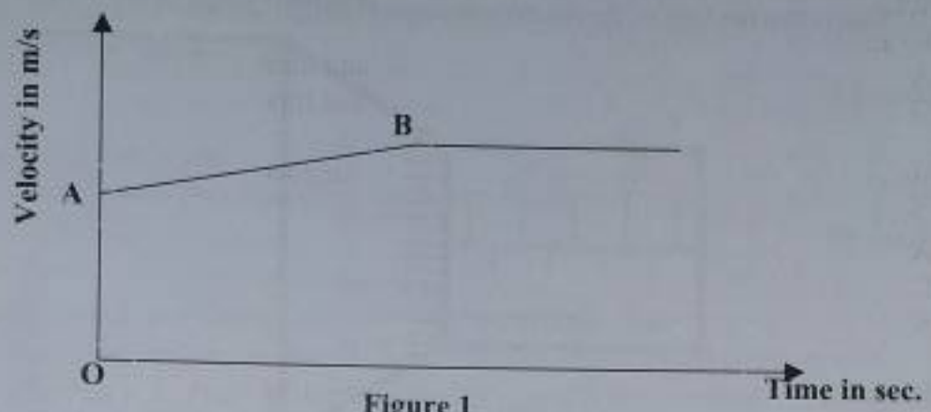

Figure 1

A at rest. B decelerating. C in motion. D accelerating E at zero velocity.

(x) The nature of the images formed by convex mirror when situated behind the mirror between principal focus and pole are described as

A virtual, erect and diminished. B virtual, erect and the same size as the object.
C virtual, erect and magnified. D real, inverted and magnified.
E real, inverted and diminished.

SECTION B (30 Marks)

Answer **all** questions in this section.

2. Define the following terms with respect to simple machine:
   (a) Mechanical advantage
   (b) Velocity ratio
   (c) Efficiency

3. Differentiate between noise and a musical note.

4. Briefly explain why the notes of the same pitch played on a guitar and flute sound different?

5. What is the difference between strength and toughness?

6. Briefly explain three points to justify that burns caused by steam are more severe than water at 100°C.

7. Briefly explain the following:

   (a) It is not easy to push a stationary car while you are inside it.

   (b) It is very difficult to walk on very smooth surface.

8. (a) List three principal methods of heat transmission.
   (b) What is the reading of the micrometer screw gauge shown in the Figure 2?

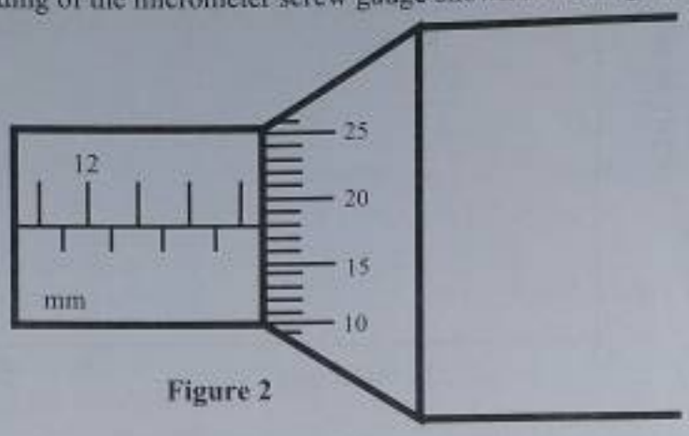

Figure 2

9. Draw a simple hydrometer and label its parts.

10. State three properties of the image formed by a plane mirror.

11. Briefly explain why it is difficult to stop a heavy truck from motion compared to a light small car.

SECTION C (60 Marks)

Answer **three (3)** questions from this section.

12. (a) What do you understand by the term;
    (i) angular acceleration?
    (ii) degree as applied to circular motion?

02 marks

    (b) A fly wheel rotating at 20 rev/min is accelerated uniformly for 10 seconds until it reaches 40 rev/min. Determine the
    (i) angular acceleration.
    (ii) number of revolutions made by the flywheel in the 10 seconds.

18 marks

13. (a) (i) State the second law of refraction.
    (ii) A ray of light in air makes an angle of incidence 60^0 with a glass surface of refractive index 1.5. What is the angle of refraction?

09 marks

(b) (i) The apparent depth of a swimming pool appears to be 0.5 m. If the refractive index of water is $\frac{4}{3}$, calculate the real depth of water in the pool.

(ii) A small object is placed at the bottom of a tall gas jar. If the gas jar is filled with water to a depth of 28 cm, by how much is the object apparently displaced?

07.5 marks

(c) A glass mirror 12 mm thick has a scratch on its surface. How far from the scratch does its image appear to be?

3.5 marks

14. (a) (i) State Ohm's law.

(ii) Differentiate potential difference from electromotive force (e.m.f) of a cell.

04 marks

(b) Study Figure 3 then answer the following questions:

(i) Calculate the total resistance between terminals A and B of the circuit.

(ii) Find the p.d across the 60 Ω resistor if A and B are connected to the terminals of 240 V supply.

16 marks

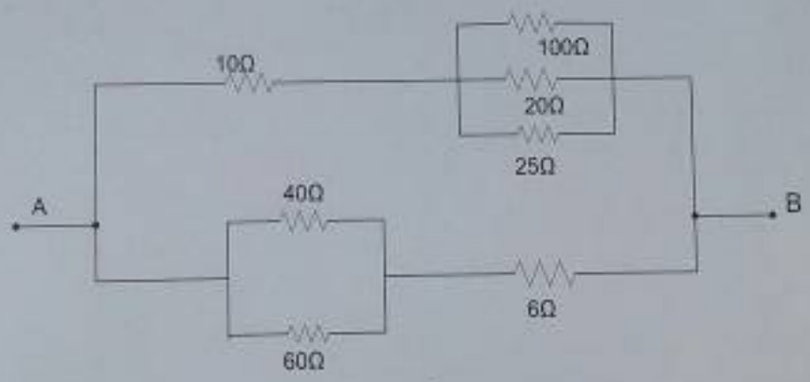

Figure 3

15. (a) (i) Define pressure.

(ii) List three factors on which the pressure in liquid depends

(iii) Briefly explain why the wall of a dam is made much thicker at the bottom than at the top?

06 marks

(b) A rectangular glass block of density 400kg/m^3 has dimensions 0.2m x 0.4m x 2m. Calculate the:

(i) maximum pressure.

(ii) minimum pressure it can exert when resting on the ground.

8.5 marks

(c) A column of mercury of density $13600kg/m^3$ is 500mm high. If the area of the base is $5.0cm^2$. Find the;

(ii) pressure it exerts.

(iii) force applied.

05.5 marks

16. (a) State the law of conservation of momentum.

01 mark

(b) A railway truck of mass 2.4 tonnes moving at 4.7 m/sec collide with a car at rest on a level track. If after collision the car and trucks move together with a common velocity of 1.2 m/sec, find:

(i) the mass of a car.

(ii) the original kinetic energy of the railway truck.

(iii) the total kinetic energy of both trucks after collision.

19 marks