THE UNITED REPUBLIC OF TANZANIA
NATIONAL EXAMINATIONS COUNCIL
CERTIFICATE OF SECONDARY EDUCATION EXAMINATION

097

MECHANICAL DRAUGHTING

(For Both School and Private Candidates)

TIME: 3 Hours *Monday November 17, 2003 a.m.*

Instructions

1. This paper consists of **SIX (6)** questions.
2. Answer question **number 1** and any other **THREE (3)** questions.
3. Question number 1 carries 40 marks while the rest carry 20 marks each.
4. Cellular phones are **not** allowed in the examination room.
5. Electronic calculators are **not** allowed in the examination room.
6. Write your Examination Number on every page of your answer booklet(s).

This paper consists of 4 printed pages

1. Figure 1 shows the detail of a GEAR CASE. Draw using scale 1:2, the following views:

(a) A sectional front elevation on plane AA

(b) A sectional end elevation on plane BB

(c) A plan

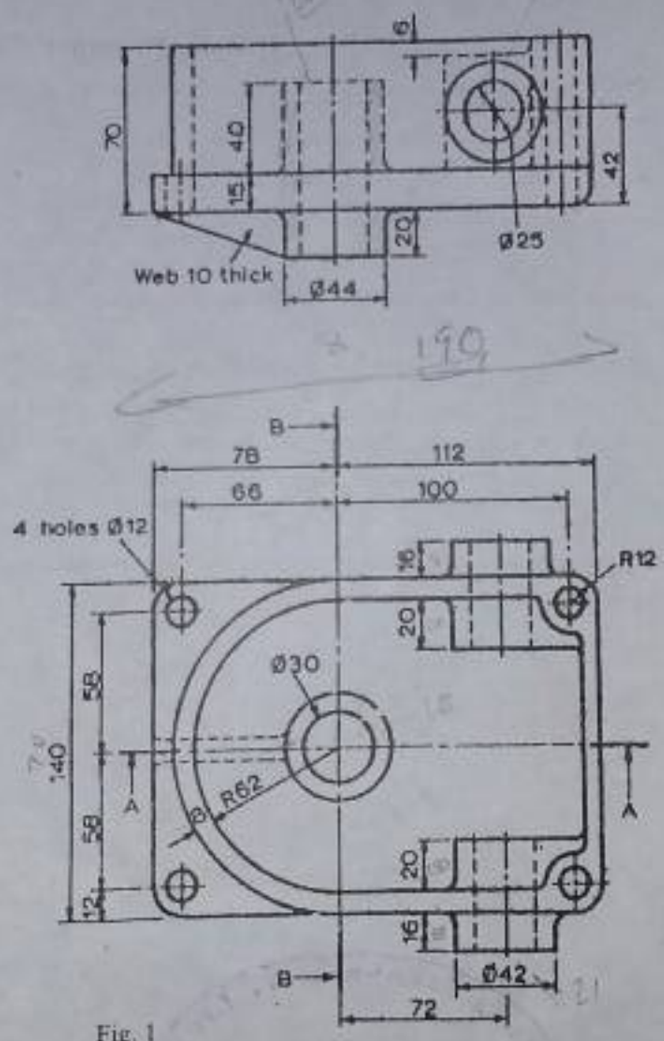

Fig. 1

2. Figure 2 shows a crank OA driving a connecting rod AB which is free to slide in the pivot block C. Draw the locus of rod end B for one complete revolution of OA. Show all the constructions clearly.

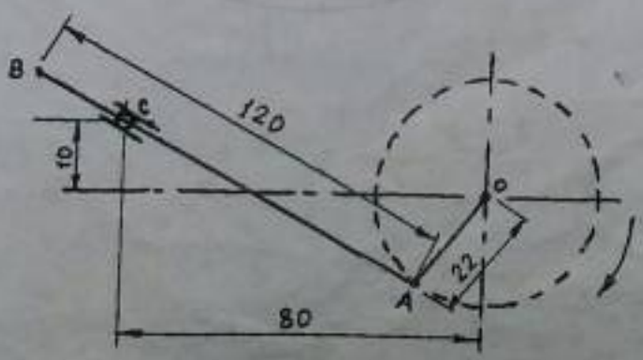

3. Incomplete elevation and plan of a cylinder interpenetrating a square pyramid at right angle are shown in figure 3.

Draw: (a) the given views
(b) the correct lines of intersection
(c) the development of the cylinder part only.

Show the constructions clearly.

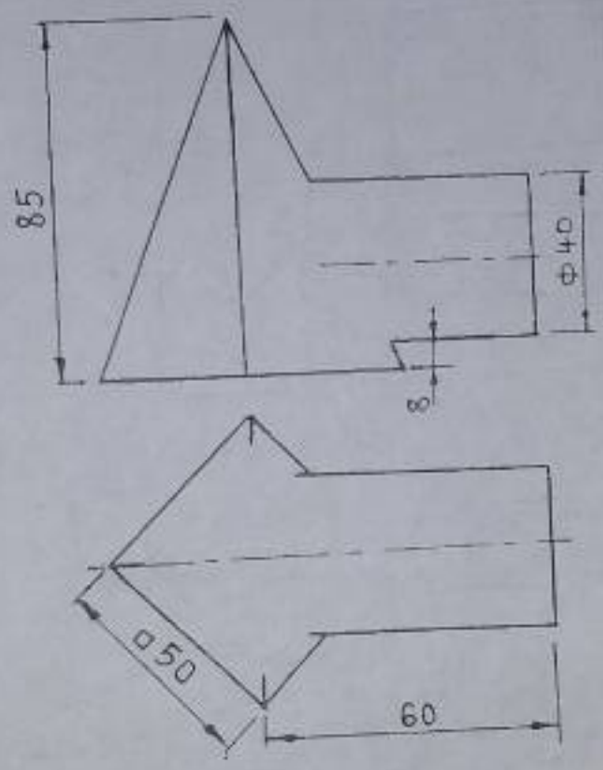

Fig. 3

4. The plan of a line 82 mm long is shown on figure 4. The elevation of one end is at 'b'.

(a) Draw the given plan and the complete front elevation.

(b) Measure the true angles of inclinations to HP and VP.

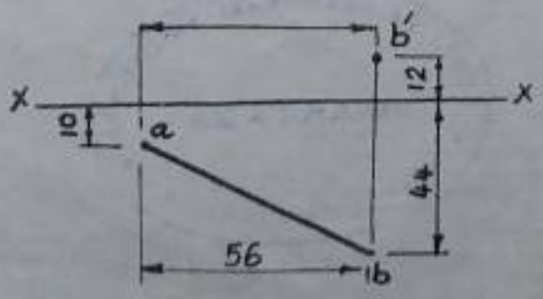

Fig. 4

5. (a) Define the following terms:
(i) Locus
(ii) Parabola
(iii) Archimedian Spiral
(iv) Cycloid

(b) Name three methods used for drawing isometric circles in isometric projection of an object.

(c) State two advantages of half-section.

6. (a) Figure 5 shows three incomplete views of the object. Copy the given views and add the missing lines on the plan. Take dimensions from the given views.

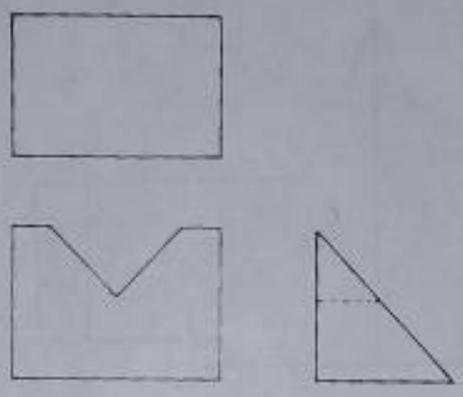

Fig. 5

(b) Why are washers used in engineering works?

(c) Give the correct name for each of the washers shown in figure 6.

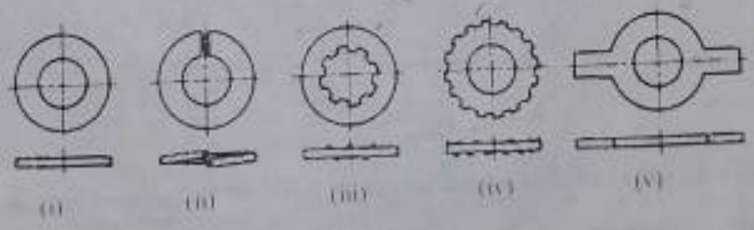

Fig. 6