HARUNA HASSAN EL-NINHO

THE UNITED REPUBLIC OF TANZANIA
NATIONAL EXAMINATIONS COUNCIL
ADVANCED CERTIFICATE OF SECONDARY EDUCATION EXAMINATION

136/1

COMPUTER SCIENCE 1
(For Both Schools and Private Candidates)

Time: 3 Hours **Wednesday, 03rd May 2017 p.m.**

Instructions

1. This paper consists of **thirteen (13)** questions in sections A and B.
2. Attempt **all** questions in section A and any **two (2)** questions from section B.
3. Cellular phones are **not** allowed in the examination room.
4. Write your **Examination Number** on every page of your answer booklet(s).

1 702136 100010

SECTION A (60 Marks)

Answer **all** questions in this section.

1. (a) Define the term macros and give three advantages of using macros in spreadsheets. **(4.5 marks)**

   (b) Mention three types of cell referencing used when creating formulae and manipulating cell(s) content. **(1.5 marks)**

2. (a) Write four steps required to change binary number to decimal number system. **(2 marks)**

   (b) Write the Boolean expression of the following logic gate circuit. **(2 marks)**

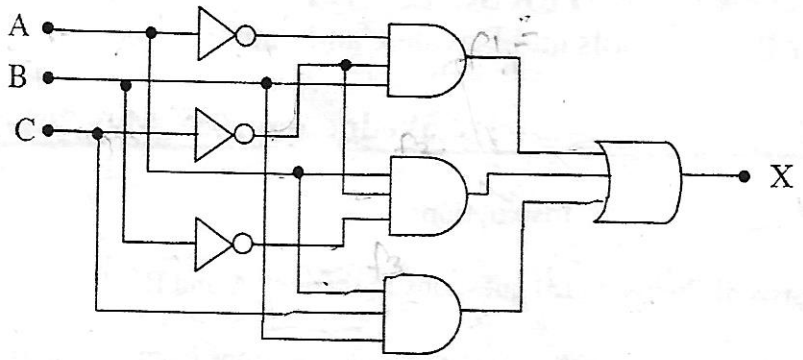

   (c) Use Boolean laws of algebra to show that (A'B'C) + (A'BC) + (AB'C) + (ABC) = C **(2 marks)**

3. (a) List four steps to be followed in the development process of a program. **(2 marks)**

   (b) Describe the role of "algorithms" and explain two types of algorithms used in programming languages. **(4 marks)**

4. (a) With an example in each case, distinguish Procedural Programming languages from Object Oriented Programming (OOP) languages. **(2 marks)**

   (b) Use "For loop" to write a C++ program which can be used to calculate a factorial of a number entered by a user. The program should check if the entered number is positive and give the appropriate message, if the number is not positive. (HINT: 0! = 1 and n! = n(n-1)!). **(4 marks)**

5. (a) Mention four major components of networking. Give one example for each. **(4 marks)**

   (b) Differentiate microwave transmission from satellite transmission. **(2 marks)**

6. (a) Define a term "form" as applied in Visual Basic. **(1 mark)**

   (b) Explain the function of "show method" and "load statement" as used in Visual Basic. Give an example of Visual Basic code for each. Use "frmlogin" as the name of the form. **(3 marks)**

   (c) Differentiate DirListBox from OLE control. **(2 marks)**

7. (a) Outline two control measures which may be used to protect an information system against viruses. **(2 marks)**

   (b) Explain two key principles of securing data or information. **(4 marks)**

8. (a) Explain two roles of frame tag (<främe>) in webpage development. **(2 marks)**

(b) Write HTML and JavaScript codes that develop HTML form with one input field named "Number" and a submit button called "Process". The form should accepts a value, checks if a value is a number and is greater than 0. If not alerts "Error: Provide a number greater than 0". If the entered value is an even number, it alerts "The number provided is divisible by 2" otherwise it alerts "The number provided is not divisible by 2". **(4 marks)**

9. (a) Explain the term "Normalization" as used in the database development process. **(1.5 marks)**

(b) Describe three types of modification anomalies in the database. **(4.5 marks)**

10. (a) Name parts of the Visual Basic Integrated Development Environment (IDE) window given below and give the purpose of part C. **(4 marks)**

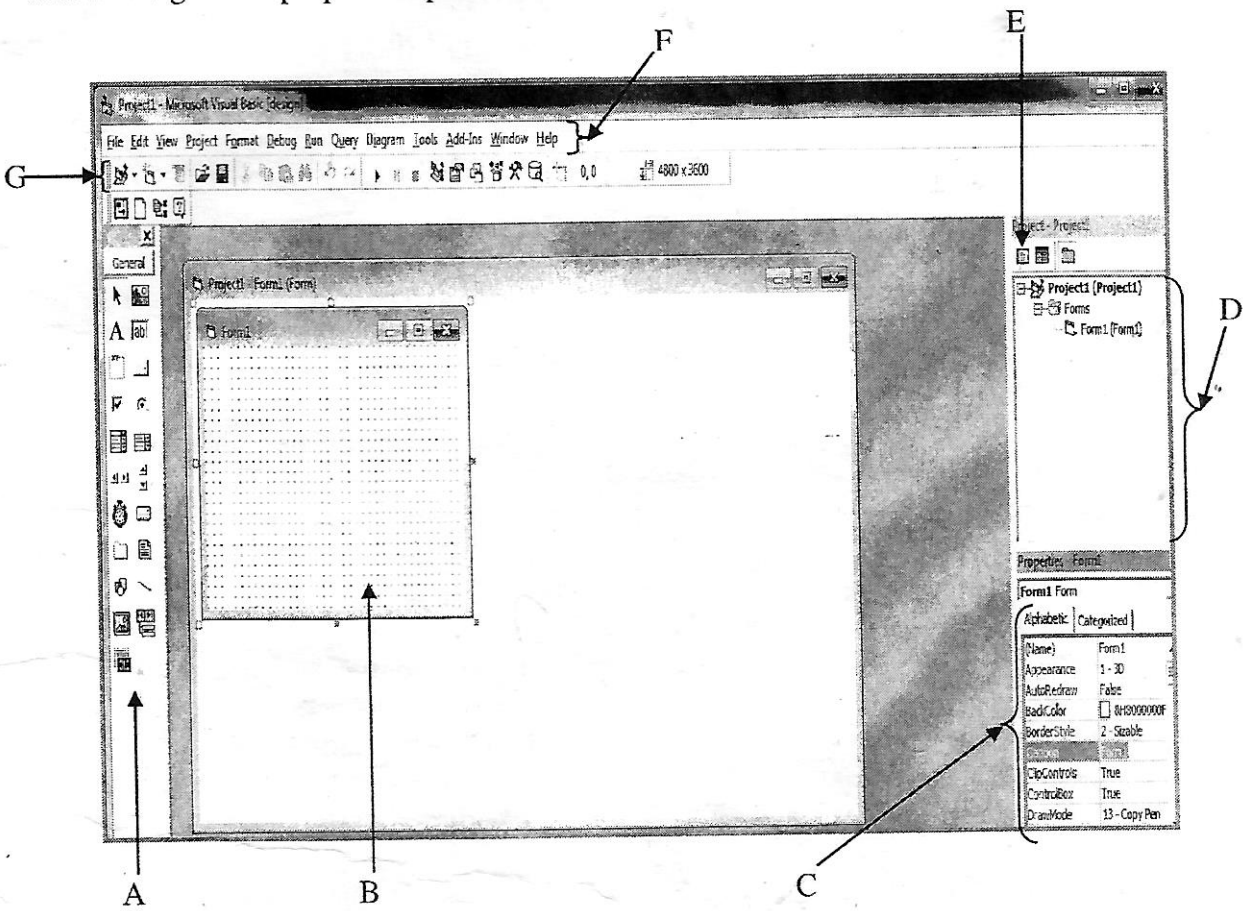

(b) Give four steps required to open an empty Visual Basic form. **(2 marks)**

SECTION B (40 Marks)

Answer any **two (2)** questions from this section.

11. Analyze six causes for information system failure.

(20 marks)

12. Explain two positive and three negative impact of Information Technology (IT) on environmental sustainability.

(20 marks)

13. Explain two advantages and two disadvantages of an array over a linked list. Describe programming situation which will lead a programmer to choose either an array or a linked list.

(20 marks)