THE UNITED REPUBLIC OF TANZANIA
NATIONAL EXAMINATIONS COUNCIL
ADVANCED CERTIFICATE OF SECONDARY EDUCATION EXAMINATION

131/1

PHYSICS 1
(For Both School and Private Candidates)

Time: 2 Hours 30 Minutes **2007 February, 12 Monday p.m.**

INSTRUCTIONS

1. This paper consists of sections A, B and C.
2. Answer **ten (10)** questions, choosing **four (4)** questions from section A and **three (3)** questions from each of sections B and C.
3. Marks for each question or part thereof are indicated.
4. Mathematical tables and non-programmable calculators may be used.
5. Cellular phones are **not** allowed in the examination room.
6. Write your **Examination Number** on every page of your answer booklet(s).
7. The following information may be useful:

(a)	Acceleration due to gravity	$g = 9.8\ m/s^2$.
(b)	Specific heat capacity of water	$c_\omega = 4200\ Jkg^{-1}\ k^{-1}$.
(c)	Planck's constant	$h = 6.6 \times 10^{-34}$ Js.
(d)	Charge to mass ration	$\frac{e}{m_e} = 1.8 \times 10^{11}\ CKg^{-1}$.
(e)	The reciprocal of $4\pi\ \varepsilon_o$	$\frac{1}{4\pi\varepsilon_o} = 9 \times 10^9\ Nm^2C^{-2}$.
(f)	Charge of an electron	$e = 1.6 \times 10^{-19}$ C.
(g)	Permeability in free space	$\mu_o = 4\pi \times 10^{-7}\ WbA^{-1}\ m^{-1}$.
(h)	One electrom volt	$1eV = 1.6 \times 10^{-19}$ J.

USA

This paper consists of 7 printed pages.

Find more free educational resources at:
http://maktaba.tetea.org

Scanned by CamScanner

SECTION A (40 marks)

Answer **four (4)** questions from this section.

1. (a) (i) What is a systematic error? **(01 mark)**

(ii) The smallest divisions for the voltmeter and ammeter are 0.1 V and 0.01 A respectively.
If V = IR, find the relative error in the resistance R, when V = 2V and I = 0.1 A. **(02½ marks)**

(b) (i) Mention **two (2)** uses of dimensional analysis. **(01 mark)**

(ii) The frequency f of a note given by an organ pipe depends on the length, ℓ, the air pressure P and the air density D. Use the method of dimensions to find a formula for the frequency. **(03 marks)**

(iii) What will be the new frequency of a pipe whose original frequency was 256 Hz if the air density falls by 2 % and the pressure increases by 1 %? **(02½ marks)**

2. (a) (i) What is meant by the term "projectile" as applied to projectile motion? **(01 mark)**

(ii) Give **two (2)** practical applications of projectile motion at your locality. **(02 marks)**

(b) (i) A ball is thrown towards a vertical wall from a point 2 m above the ground and 3 m from the wall. The initial velocity of the ball is 20 ms^{-1} at an angle of 30° above the horizontal. If the collision of the ball with the wall is perfectly elastic, how far behind the thrower does the ball hit the ground? **(04 marks)**

(ii) The ceiling of a long hall is 25 m high. Determine the maximum horizontal distance that a ball thrown with a speed of 40 ms^{-1} can go without hitting the ceiling of the wall. **(03 marks)**

3. (a) Explain why when catching a fast moving ball, the hands are drawn back while the ball is being brought to rest. **(02 marks)**

(b) Rockets are propelled by the ejection of the products of the combustion of fuel. Consider a rocket of total mass M travelling at a speed V in a region of space where the gravitational forces are negligible.

(i) Supposing the combustion products are ejected at a constant speed V_r relative to the rocket, show that a fuel "burn" which reduces the total mass M of the rocket to m results in an increase in the speed of the rocket to v such that

$$v - V = V_r \ln\left(\frac{M}{m}\right).$$ **(03 marks)**

(ii) Supposing that 2.1×10^6 kg of fuel are consumed during a "burn" lasting 1.5×10^2 seconds and given that there is a constant force on the rocket of 3.4×10^7 N during this burn, calculate V_r and increase in speed resulting from the burn if $M = 2.8 \times 10^6$ kg. **(03 marks)**

(iii) What is the initial vertical acceleration that can be imparted to this rocket when it is launched from the earth if the initial mass is 2.8×10^6 kg? **(02 marks)**

Find more free educational resources at:
http://maktaba.tetea.org
Scanned by CamScanner

4. (a) (i) What is meant by centripetal force? **(01 mark)**

(ii) Derive the expression $a = \frac{v^2}{r}$, where a, v and r stands for the centripetal acceleration, linear velocity and radius of a circular path respectively. **(04 marks)**

(b) A ball of mass 0.5 kg attached to a light inextensible string rotates in a vertical circle of radius 0.75 m, such that it has a speed of 5 ms^{-1} when the string is horizontal.

Calculate:

(i) the speed of the ball and the tension in the string at the lowest point of its circular path. **(03 marks)**

(ii) evaluate the work done by the earth's gravitational force and by the tension in the string as the ball moves from its highest to its lowest point. **(02 marks)**

5. (a) (i) What is meant by a thermometric property of a substance? **(01 mark)**

(ii) What qualities make a particular property suitable for use in practical thermometers? **(03 marks)**

(b) (i) Explain why at least **two (2)** fixed points are required to define a temperature scale. **(01 mark)**

(ii) Mention the type of thermometer which is most suitable for calibration of thermometers. **(01 mark)**

(c) When a metal cylinder of mass 2.0×10^{-2} kg and specific heat capacity 500 J kg^{-1} K^{-1} is heated at constant power, the initial rate of rise of temperature is 3.0 K min^{-1}. After a time the heater is switched off and the initial rate of fall of temperature is 0.3 K min^{-1}. What is the rate at which the cylinder gains heat energy immediately before the heater is switched off? **(04 marks)**

6. (a) (i) What is blackbody radiation of a given body? **(01 mark)**

(ii) Explain why heat may just mean infrared. **(01 mark)**

(iii) State Prévosts theory of heat exchange. **(01 mark)**

(b) (i) Explain why in cold climates, windows of modern buildings are double grazed, i.e. there are two pieces of glass with a small air space between them. **(01marks)**

(ii) What is Wien's displacement law? **(01 mark)**

(iii) The sun's surface temperature is about 6000 K. The sun's radiation is maximum at wavelength of 0.5×10^{-6} m. A certain light bulb filament emits radiation with maximum wavelength of 2×10^{-6} m. If both the surface of the sun and of the filament have the same emissive characteristics. What is the temperature of the filament? **(02 marks)**

Find more free educational resources at:
http://maktaba.tetea.org

Scanned by CamScanner

(c) (i) State Newton's law of cooling and give one limitation of the law. **(01 mark)**

(ii) A body initially at 70 °C cools to a temperature of 55 °C in 5 minutes. What will be its temperature after 10 minutes given that the surrounding temperature is 31 °C? (Assume Newton's law of cooling holds true). **(02 marks)**

SECTION B (30 marks)

Answer **three (3)** questions from this section.

7. (a) (i) Give **two (2)** differences between progressive and standing waves. **(01 mark)**

(ii) Two progressive waves travelling along the same line in a medium are represented by $Y_1 = 10 \sin (wt + \pi/2)$ and $Y_2 = 10 \sin (wt + \pi/6)$.

If the two progressive waves form a standing wave, determine the resultant amplitude and phase angle of the wave formed. **(02 marks)**

(b) (i) State the modes of vibrations in closed and open pipes. **(01 mark)**

(ii) A metre-long tube at one end, with a movable piston at the other end, shows resonance with a fixed frequency source (a tuning fork) of frequency 340 Hz when the tube length is 25.5 cm or 79.3 cm. Estimate the speed of sound in air at the temperature of the experiment (ignore edge effects). **(03 marks)**

(c) The shortest length of the resonance tube closed at one end which resounds to a fork of frequency 256 Hz is 32.0 cm. The corresponding length for a fork of frequency 384 Hz is 20.8 cm. Determine the end correction for the tube and the velocity of sound in air. **(03 marks)**

8. (a) (i) Define the internal resistance (r) of a cell and the terminal potential difference. **(02 marks)**

(ii) The e.m.f. of a cell is a special terminal potential difference. Comment. **(01 mark)**

(b) Calculate the reading on the high resistance voltmeter V in figure 1.0 below:

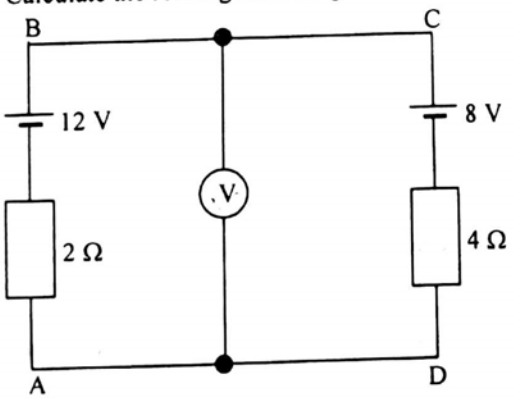

(03 marks)

Figure 1.0

(c) (i) State Kirchhoff's laws of electrical network. **(01 mark)**

(ii) Calculate the currents I_1, I_2 and I_3 flowing in the following circuit (figure 2.0 below).

Find more free educational resources at:
http://maktaba.tetea.org
Scanned by CamScanner

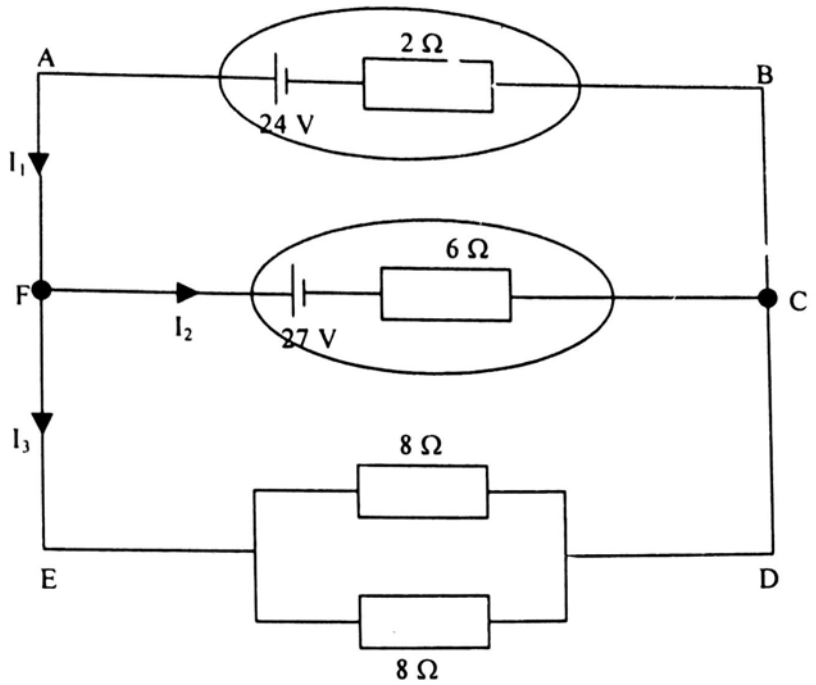

Figure 2.0

(03 marks)

9. (a) (i) List **three (3)** classes of magnetic materials on the basis of magnetic susceptibility and give one example for each class. **(03 marks)**

(ii) How are the magnetic susceptibility and relative permeability of a magnetic material related to each other? **(01 mark)**

(b) (i) Define the magnetic field intensity. **(01 mark)**

(ii) A long solenoid has 10 turns per cm and carries a current of 2.0 A. Calculate the magnetic field intensity at its centre. **(02 marks)**

(c) An a.c. generator consists of a coil of 50 turns and an area of 2. 5 m^2, rotates at an angular speed of 60 rad s^{-1} in a uniform magnetic field of 0.30 T between two fixed pole pieces. The resistance of the circuit including that of the coil is 500 Ω.

(i) What is the maximum current that can be drawn from the generator? **(02 marks)**

(iii) What is the magnetic flux through the coil if the current is maximum? **(01 mark)**

10. (a) How does the arrangement of the energy level in a semiconductor differ from that of an insulator? **(01 mark)**

(b) Using the notion of energy bands, explain the following optical properties of solids.

(i) All metals are opaque to light of all wavelengths. **(01 mark)**

(ii) Semi-conductors are transparent to infrared light although opaque to visible light. **(01 mark)**

(iv) Most insulators are transparent to visible light. **(01 mark)**

Find more free educational resources at:
http://maktaba.tetea.org

Scanned by CamScanner

(c) In the circuit shown below (figure 3.0), LDR is a light-dependent resistor, whose resistance varies from 1 M Ω in the dark to 5 M Ω in sunlight. The transistor has a current amplification factor β of about 80. The voltmeter takes a negligible current.

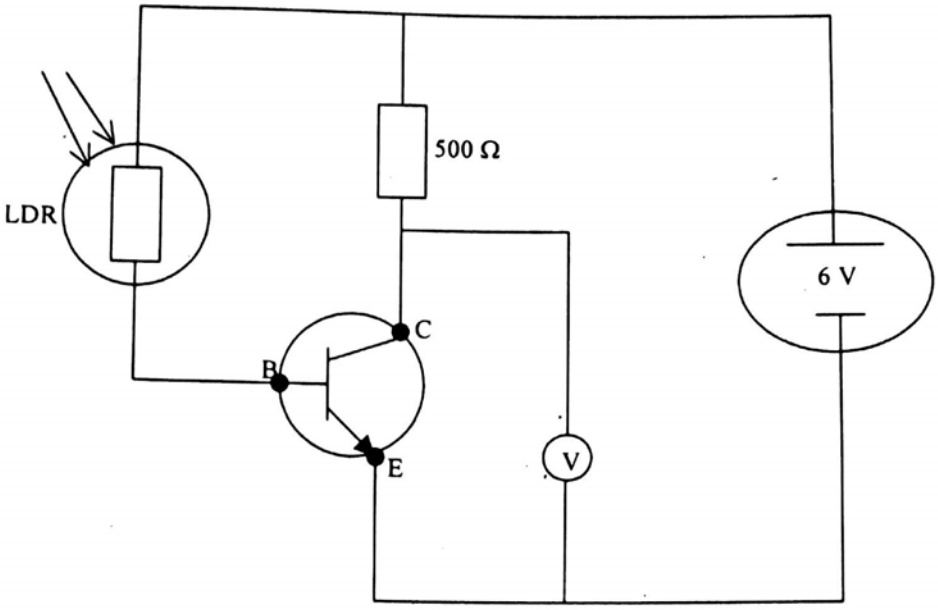

Figure 3.0

(i) Over what range of resistance would the LDR take if the voltmeter reads 5 V or more? What if it reads 1 V or less? **(03 marks)**

(ii) At what light intensity measured in terms of the resistance of LDR, would the circuit be most sensitive to small changes of intensity? (Assume that $V_{BE} = 0$ volts). **(03 marks)**

SECTION C (30 marks)

Answer **three (3)** questions from this section.

11. (a) What is the potential at the centre of the square of side 1.0 m, due to charges $q_1 = +1.0 \times 10^{-8}$ C, $q_2 = -2.0 \times 10^{-8}$ C, $q_3 = +3.0 \times 10^{-8}$ C and $q_4 = +2.0 \times 10^{-8}$ C situated at the corners of the square? **(02 marks)**

(b) What do you understand by an electrostatic generator? **(01 mark)**

(c) The belt of a Van de Graaf generator carries a charge of 100 μC per metre. If the diameter of the lower pulley is 10 cm and its angular velocity is 5 rad s^{-1}, what p.d will the upper conductor attain in 5 minutes if its capacitance to ground is 5×10^{-12} F and if there is no leakage of charge? **(07 marks)**

Find more free educational resources at:
http://maktaba.tetea.org

Scanned by CamScanner

12. (a) Two similar balls of mass m are hung from silk thread of length "**a**" and carry a similar charge **q**. Assume θ is small enough that $\tan\theta \approx \sin\theta$. To this approximation, show that

$$X = \left(\frac{q^2 a}{2\pi\varepsilon_0 mg}\right)^{\frac{1}{3}}$$

, where X is the distance of separation. **(03 marks)**

(b) A charge Q is distributed over the concentric hollow spheres of radii r and R (R > r) such that the surface densities are the same. Calculate the potential at the common centre of the two spheres. **(07 marks)**

13. (a) (i) Make a well labelled diagram of the cathode ray oscilloscope and explain briefly how a sinusoidal voltage signal is displayed on its screen. **(03 marks)**

(ii) Mention **three (3)** practical applications of the cathode ray oscilloscope. **(01½ marks)**

(b) An electron having 450 eV of energy enters at right angles to a uniform magnetic field of strength 1.50×10^{-3} T. Show that the path traced by the electron in a uniform magnetic field is circular and estimate its radius. **(02½ marks)**

(c) A charged oil drop of mass 6.0×10^{-15} kg falls vertically in air with a steady velocity between two long parallel vertical plates 5.0 mm apart. When a potential difference of 3000 V is applied between the plates the drop falls with a steady velocity at an angle of 58° to the vertical.

Determine the charge Q, on the oil drop. **(03 marks)**

14. (a) (i) What are the differences between P and S waves? **(02 marks)**

(ii) Explain how the two terms of waves (P and S) can be used in studying the internal structure of the earth. **(01 mark)**

(b) Write short notes on the following terms in relation to changes in the earth's magnetic field: long-term (secular) changes, short-period (regular) changes and short-term (irregular) changes. **(03 marks)**

(c) (i) What is geomagnetic micropulsation. **(01 mark)**

(ii) Give a summary of location, constitution and practical uses of the stratosphere, ionosphere and mesosphere. **(03 marks)**

Find more free educational resources at:
http://maktaba.tetea.org

Scanned by CamScanner