THE UNITED REPUBLIC OF TANZANIA
NATIONAL EXAMINATIONS COUNCIL
ADVANCED CERTIFICATE OF SECONDARY EDUCATION EXAMINATION

131/2 **PHYSICS 2**

(For Both School and Private Candidates)

Time: 2 Hours 30 Minutes *2009 February, 25 Wednesday p.m.*

INSTRUCTIONS

1. This paper consists of **10** questions in sections A, B and C.
2. Answer **five (5)** questions, choosing at least **one (1)** question from each section.
3. All questions carry equal marks.
4. Mathematical tables and non-programmable calculators may be used.
5. Cellular phones are **not** allowed in the examination room.
6. Write your **Examination Number** on every page of your answer booklet(s).
7. The following information may be useful.

Young's Modulus of steel	E_s	=	$2.0 \times 10^{11}\ Nm^{-2}$
Moment of Inertia of solid cylinder	I	=	$\frac{1}{2}MR^2$
I atmosphere		=	$1.01 \times 10^5\ Pa$
Refractive index of glass	η	=	1.5
Avogadro's number	N_A	=	$6.02 \times 10^{23}\ mol^{-1}$
Permeability of free space	μ_o	=	$4\pi \times 10^{-7}\ Hm^{-1}$
Pie	π	=	3.14
Charge of electron	e	=	$1.6 \times 10^{-19}\ C$
Speed of light	C	=	$3 \times 10^8\ ms^{-1}$
Planck's constant	h	=	$6.63 \times 10^{-34}\ Js$.

This paper consists of 8 printed pages

Find more free educational resources at:
http://maktaba.tetea.org
Scanned by CamScanner

SECTION A

1. (a) Define the following terms:
   (i) Tensile stress.
   (ii) Tensile strain.
   (iii) Young's modulus

   (b) (i) Derive the expression for the work done in stretching a wire of length L by a load W through an extension X.
   (ii) A vertical wire made of steel of length 2.0 m and 1.0 mm diameter has a load of 5.0 kg applied to its lower end. What is the energy stored in the wire?

   (c) A copper wire 2.0 m long and 1.22×10^{-3} m diameter is fixed horizontally to two rigid supports 2.0 m apart. Find the mass in kg of the load, which when suspended at the mid point of the wire, produces a sag of 2.0×10^{-2} m at the point.

2. (a) Define angular momentum and give its dimensions.

   (b) A grinding wheel in a form of solid cylinder of 0.2 m diameter and 3 kg mass is rotated at 3600 rev./minute.
   (i) What is its kinetic energy?
   (ii) Find how far it would have to fall to acquire the same kinetic energy as in 2(b)(i) above.

   (c) A uniform solid cylinder of mass **M** and radius **R** rotates about a vertical axis on a frictionless bearing. A mass less cord rapped with many turns round the cylinder passes over a pulley of rotational inertia **I** and radius **r** and then attached to a small mass **m** that is otherwise free to fall under the influence of gravity as shown in figure 1 below.

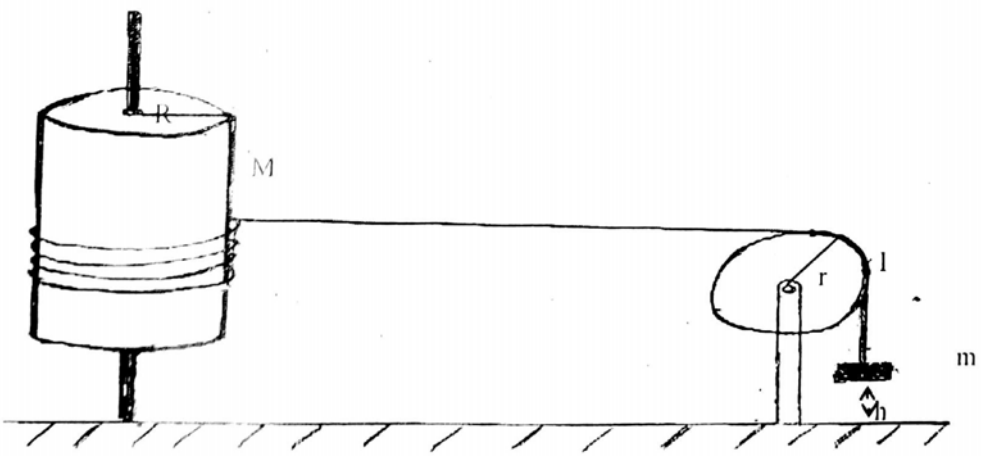

Fig. 1

Find more free educational resources at:
http://maktaba.tetea.org

Scanned by CamScanner

If there is no friction in the pulley axle and the cord does not slip, what is the speed of the small mass after it has fallen a distance **h** from rest?

3. (a) (i) What is the difference between isothermal and adiabatic processes?

(ii) Write down the equation of state obeyed by each process in 3(a)(i) above.

(iii) Using the same graph and under the same conditions, sketch the isotherms and the adiabatics.

(b) Derive the expression for the work done by the gas when it expands from volume V_1 to volume V_2 during an

(i) Isothermal process.

(ii) Adiabatic process

(c) When water is boiled under a pressure of 2 atmospheres the boiling point is $120^{o}C$. At this pressure one kg of water has a volume of 10^{-3} m^3 and two kg of steam have a volume of 1.648 m^3. Compute the

(i) work done when one kg of steam is formed at this temperature.

(ii) increase in the internal energy.

4. (a) (i) State Kepler's laws of planetary motion.

(ii) Explain the variation of acceleration due to gravity, g, inside and outside the earth.

(b) Derive the formulae for mass and density of the earth.

(c) (i) What do you understand by the term satellite?

(ii) A satellite of mass 100 kg moves in a circular orbit of radius 7000 km around the earth, a ssumed to be a sphere of radius 6400 km. Calculate the total energy needed to place the satellite in orbit from t he earth, assuming g = 10 Nkg-1 at the earth's surface.

Find more free educational resources at:
http://maktaba.tetea.org

Scanned by CamScanner

SECTION B

5. (a) (i) What is interference? Explain the term path difference with reference to the interference of two wave-trains.

(ii) Why is it not possible to see interference when the light beams from head lamps of a car overlap?

(iii) Discuss whether it is possible to observe an interference pattern when white light is shone on a Young's double slit experiment.

(b) A grating has 500 lines per millimetre and is illuminated normally with monochromatic light of wavelength 5.89×10^{-7} m.

(i) How many diffraction maxima may be observed?

(ii) Calculate the angular separation.

(c) In figure 2 below, S_1 and S_2 are two coherent light sources in a Young's two slit experiment separated by a distance 0.5 mm and O is a point equidistant from S_1 and S_2 at a distance 0.8 m from the slits. When a thin parallel sided piece of glass (G) of thickness 3.6×10^{-6} m is placed near S_1 as shown, the central fringe system moves from O to a point P. Calculate OP. (The wavelength of light used = 6.0×10^{-7} m).

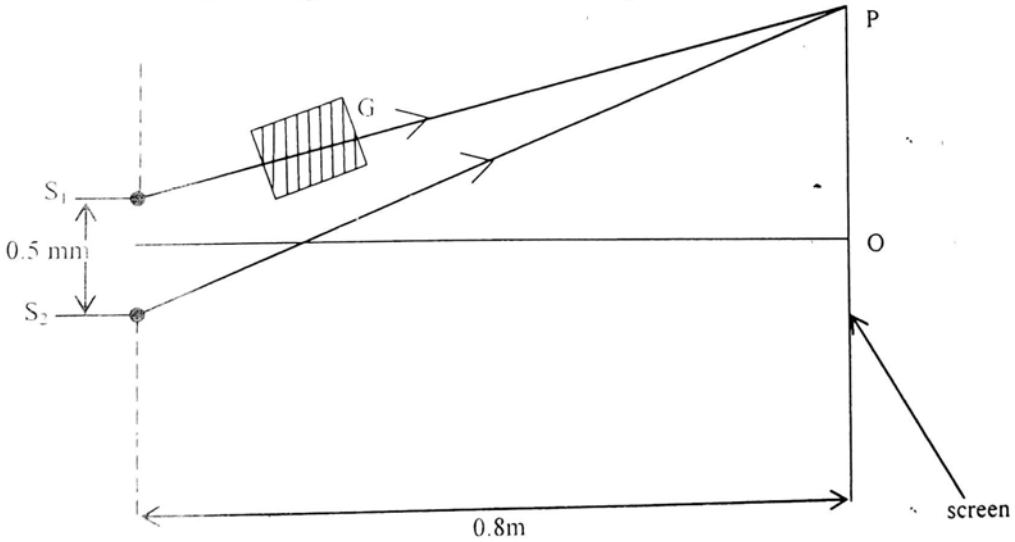

Fig. 2

6. (a) Explain the mechanism of electric conduction in:

(i) gases.

(ii) electrolytes.

Find more free educational resources at:
http://maktaba.tetea.org

Scanned by CamScanner

(d) (i) Develop an equation for the torque acting on a current carrying coil of dimensions $l \times b$ placed in a magnetic field. How is this effect applied in a moving coil galvanometer?

(ii) A galvanometer coil has 50 turns, each with an area of 1.0 cm^2. If the coil is in a radial field of 10^{-2} T and suspended by a suspension of torsion constant 2×10^{-9} Nm per degree, what current is needed to give a deflection of 30^0?

SECTION C

8. (a) Explain the following terms:

(i) Forward bias.

(ii) Reverse bias.

(iii) Inverting and non-inverting amplifier.

(b) Define the following:

(i) Logic gate.

(ii) Integrated circuit.

(iii) Modulation.

(c) An operational amplifier is to have a voltage gain of 100. Calculate the required values for the external resistances R_1 and R_2 when the following gains are required:

(i) non-inverting.

(ii) inverting.

Find more free educational resources at:
http://maktaba.tetea.org

Scanned by CamScanner

(b) (i) State the laws of electromagnetic induction.

(ii) Outline four applications of eddy currents.

(c) A coil of 100 turns is rotated at 1500 revolutions per minute in a magnetic field of uniform density 0.05 T. If the axis of rotation is at right angles to the direction of the flux and the area per turn is 4000 mm^2, calculate the:

(i) frequency.

(ii) period.

(iii) maximum induced e.m.f.

(iv) maximum value of the induced e.m.f when the coil has rotated through 30^0 from the position of zero e.m.f.

7. (a) The diagram below (fig. 3) shows a wire of length ℓ carrying a current I and placed in a magnetic field B such that its length is perpendicular to B. Derive an expression for the force exerted on the wire.

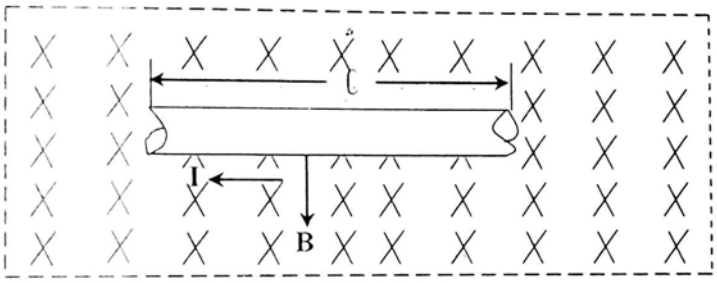

Fig. 3

(b) (i) Give a general form expressing the force exerted on the wire carrying current I if its length ℓ is inclined at an angle θ to the magnetic field B.

(ii) A wire carrying a current of 2A has a length 100 mm in a uniform magnetic field of 0.8 Wbm^{-2}. Find the force acting on the wire when the field is at 60^0 to the wire.

(c) A wire carrying a current of 25 A and 8 m long is placed in a magnetic field of flux density 0.42 T. What is the force on the wire if it is placed:

(i) at right angles to the field?

(ii) at 45^0 to the field?

(iii) along the field?

Find more free educational resources at:
http://maktaba.tetea.org

Scanned by CamScanner

(d) Given the circuit in figure 4 below, describe what happens to V_o when V_i is raised suddenly from 0 to 1V and remains at that voltage.

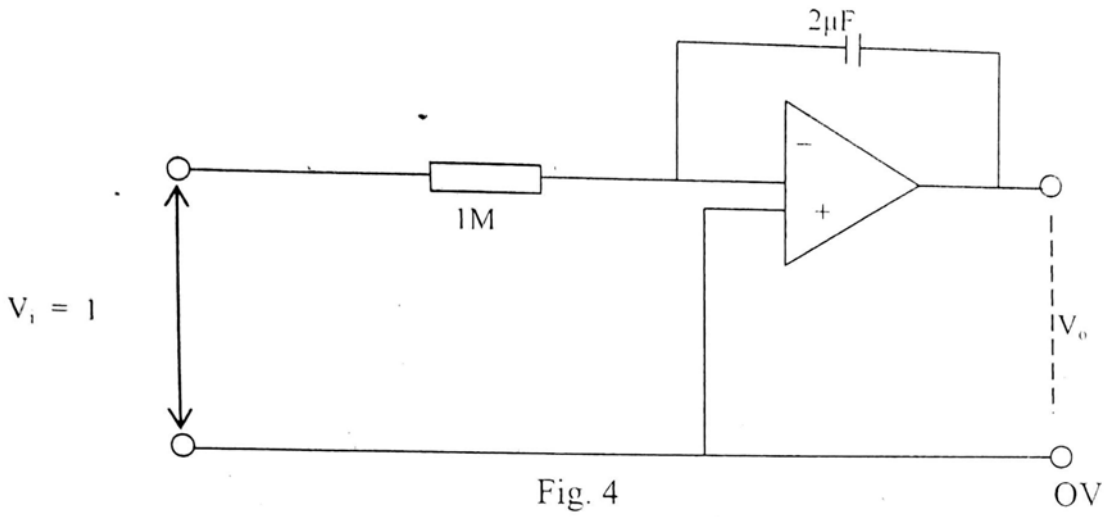

Fig. 4

(a) Write down Bragg's equation for the study of the atomic structure of crystals by X – rays.

(b) The radiation from an X – ray tube which operates at 50 kV is diffracted by a cubic KCl crystal of molecular mass 74.6 and density 1.99×10^3 kg m^{-3}. Calculate:

(i) The shortest wavelength limit of the spectrum from the tube.

(ii) The glancing angle for first order reflection from the planes of the crystal for that wavelength and angle of deviation of a diffracted beam.

(c) The radiation emitted by an X – ray tube consists of continuous spectrum with a line spectrum superimposed on it. Explain how the continuous spectrum and the line spectrum are produced.

Draw the graph of the spectra stated.

10. (a) Explain the following observations:

(i) A radioactive source is placed in front of a detector which can detect all forms of radioactive emissions. It is found that the activity registered is noticeably reduced when a thin sheet of paper is placed between the source and detector.

(ii) When a brass plate with a narrow vertical slit is placed in front of the radioactive source in 10.(a)(i) above and a horizontal magnetic field normal to the line joining the source and the detector is applied, it is found that the activity is further reduced.

Find more free educational resources at:
http://maktaba.tetea.org

Scanned by CamScanner

(iii) The magnetic field in 10.(a)(ii) is removed and a sheet of aluminium is placed in front of the source. The activity recorded is similarly reduced.

(b) (i) Define the terms laser and maser.

(ii) Give three applications of laser.

(c) (i) A laser beam has a power of 20×10^9 watts and a diameter of 2 mm. Calculate the peak values of electric field and magnetic fields.

(ii) A 2.71 g sample of KCl from the chemistry stock is found to be radioactive and decays at a constant rate of 4490 disintegrations per second. The decays are traced to the element potassium and in particular to the isotope ^{40}K which constitutes 1.17% of normal potassium. Calculate the half life of the nuclide.

Find more free educational resources at:
http://maktaba.tetea.org

Scanned by CamScanner