THE UNITED REPUBLIC OF TANZANIA
NATIONAL EXAMINATIONS COUNCIL
CERTIFICATE OF SECONDARY EDUCATION EXAMINATION

084

ELECTRICAL DRAUGHTING

(For Both School and Private Candidates)

Time: 3 Hours *Wednesday, 05th October 2011 p.m.*

Instructions

1. This paper consists of **six (6)** questions.
2. Answer question **1** and any other **three (3)** questions.
3. Question 1 carries 40 marks while the other questions carry 20 marks each.
4. Calculators are **not** allowed in the examination room.
5. Cellular phones are **not** allowed in the examination room.
6. Write your **Examination Number** on every page of your answer booklet(s).
7. Whenever necessary use the following constant:
   - 1 inch = 25.4 millimeters

This paper consists of 4 printed pages.

Find more free educational resources at:
http://maktaba.tetea.org

1. Draw isometric view of a hinge-bracket from the given views in first angle projection shown below. Drawing should be in a standard paper format. **(40 marks)**

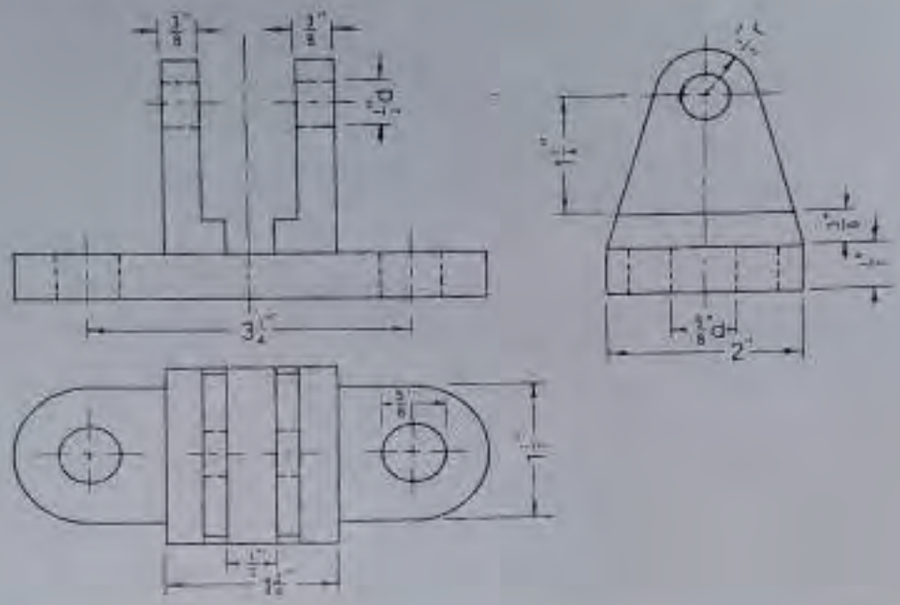

2. Draw the wiring diagram for a customer having the following requirements in his house:
   (a) 1 fluorescent fitting , 40 W in each of the 3 bedrooms
   (b) One 13 A switch socket in each bedroom
   (c) 2 fluorescent fittings, 40 W in the corridor
   (d) 4 security filament lamps of 100 W
   (e) 2 fluorescent fittings, 40 W in the lounge
   (f) 1 fluorescent fitting, 40 W in the kitchen
   (g) Four 13 A switch sockets in the sitting room

   Indicate the cable size used throughout and include appropriate fuse protection. Assume a single-phase public supply system. **(20 marks)**

3. (a) What is meant by a schedule of outlets? **(02 marks)**

   (b) Define the following terms: **(03 marks)**
      (i) Logic diagram
      (ii) Component diagram
      (iii) Drill plans or tapes.

   (c) By using simple diagrams, sketch the following as used in electrical drawing:
      (i) Detached circuit diagram
      (ii) Installation circuit diagram
      (iii) House plan
      (iv) Assembled representation diagram

      Note: For all cases above use two lighting points and two one way switches. **(12 marks)**

   (d) List six tools commonly used in electrical draughting. **(03 marks)**

Find more free educational resources at:
http://maktabo.tetea.org

4 (a) What do you understand by the following terms? **(02 marks)**

(i) Assembled drawing

(ii) Detached drawing

(b) (i) Explain three types of diagrams used to show electrical circuits in technical drawings **(03 marks)**

(ii) Mention two roles played by a single-line circuit diagrams **(02 marks)**

(iii) Give three applications of each role mentioned in 4 (b) (ii) above **(03 marks)**

(c) The sketch shown below represents an installation plan of two lamps controlled by one way switch. A socket outlet is also fed from power line supplying lamps. Draw an operational wiring diagram. **(10 marks)**

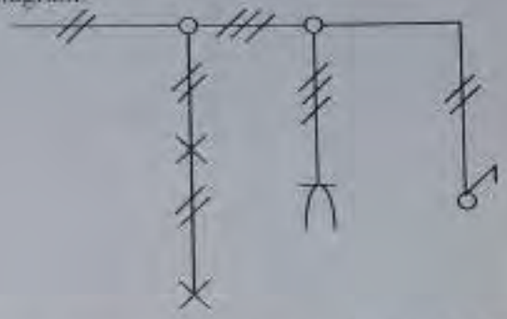

5 (a) With the aid of diagram, describe the working principle of a full wave bridge rectifier **(10 marks)**

(b) Draw a well labeled smoothed bridge rectifier circuit connected to a step down transformer. Show its output and input wave forms **(10 marks)**

6 (a) What do the following electronic components represent? **(04 marks)**

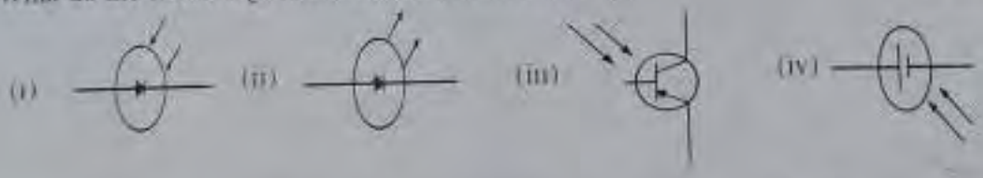

(b) Draw the output waveform of the operational amplifier (op-amp) for the various types of input given below **(08 marks)**

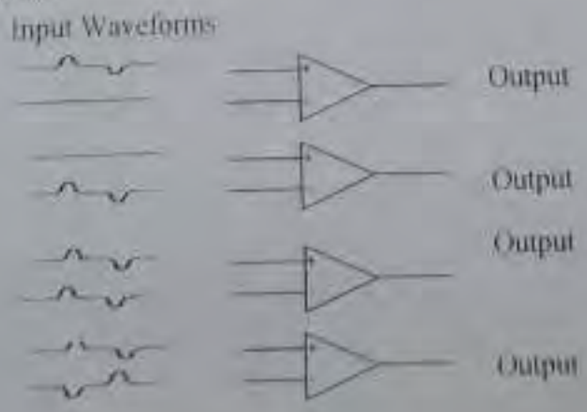

Find more free educational resources at:
http://maktaba.tetea.org

(c) Redraw the following sketch as a formal schematic diagram. Number all components using left to right, top to bottom numbering scheme. **(08 marks)**

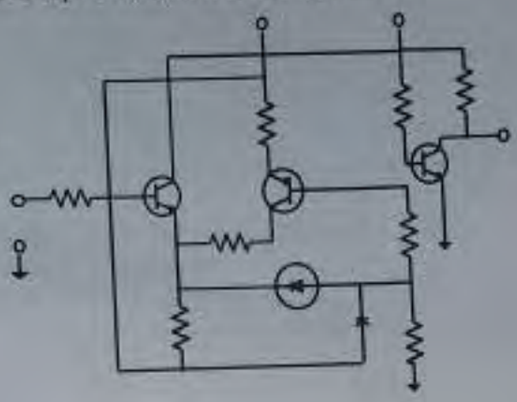

Find more free educat
http://maktaba.tetea.org