THE UNITED REPUBLIC OF TANZANIA
NATIONAL EXAMINATIONS COUNCIL
CERTIFICATE OF SECONDARY EDUCATION EXAMINATION

084

# ELECTRICAL DRAUGHTING

(For Both School and Private Candidates)

**Time: 3 Hours** **Tuesday, 11th November 2014 p.m.**

**Instructions**

1. This paper consists of **six (6)** questions.
2. Answer question **1** and any other **three (3)** questions.
3. Question 1 carries 40 marks while the other questions carry 20 marks each.
4. Non programmable calculators may be used.
5. Cellular phones are **not** allowed in the examination room.
6. Write your **Examination Number** on every page of your answer booklet(s).



Find more free educational resourc
http://maktaba.tetea.org

1. Draw the isometric view in third angle projection of a casting from the given views which are shown in Figure 1. All dimensions are in mm. Constructed lines must not be erased and drawings should be clearly shown in a standard paper format. **(40 marks)**

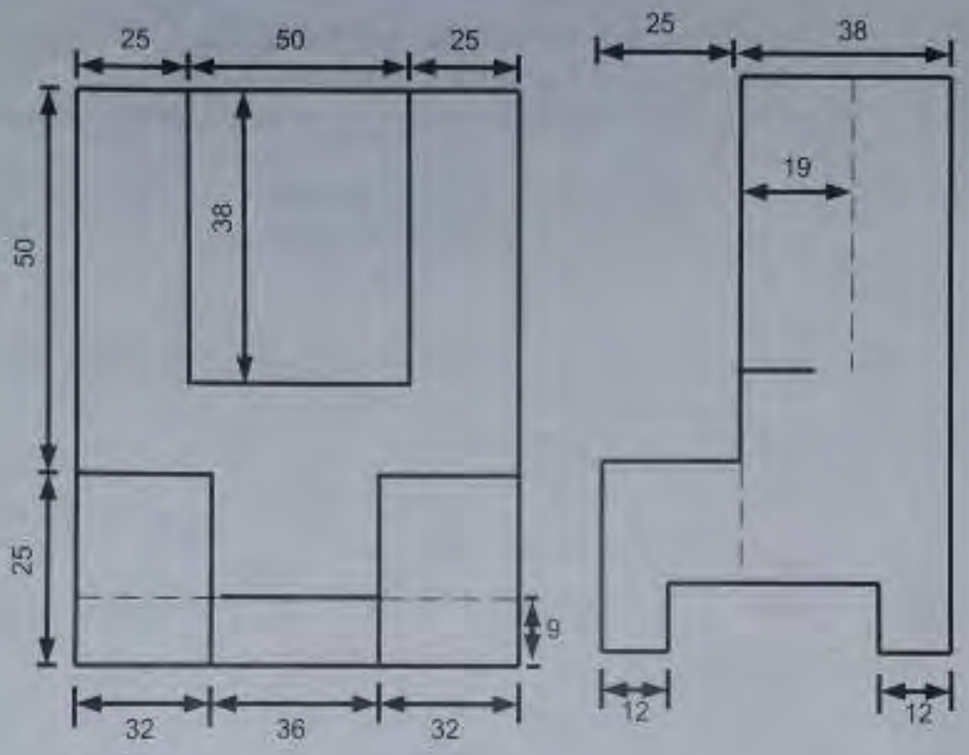


**Figure 1**

2. (a) Differentiate schematic diagrams from wiring diagrams as used in electronic engineering. **(06 marks)**

(b) Draw symbols used in installation layout diagram for representation of the following electrical devices:

(i) Light point with built in switch
(ii) Socket outlet with pilot lamp
(iii) Cart operated single pole one way switch
(iv) Emergency (safety) lighting point
(v) Automatic fire detector. **(05 marks)**

(c) With the aid of diagrams, explain the following terms as applied in electrical diagram.

(i) One-way switching circuit
(ii) Two way switching circuit
(iii) Intermediate switching circuit. **(09 marks)**



Find more free educational resources at:
http://maktaba.tetea.org

3. (a) Name the electrical symbols numbered (1-10) shown in Figure 2.

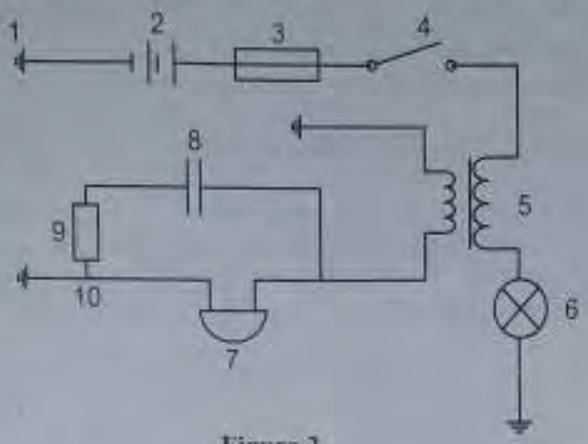


**(05 marks)**

**Figure 2**

(b) Draw the circuit diagram of a full wave bridge rectifier. Explain how it works.

**(10 marks)**

(c) Figure 3 is a schematic diagram. Draw its component assembly.

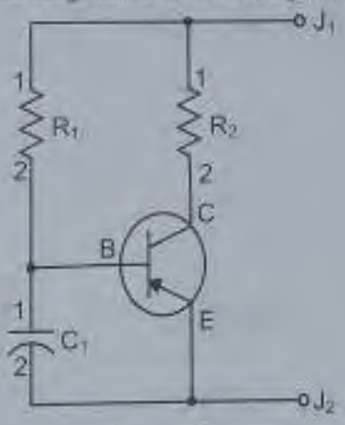


**(05 marks)**

**Figure 3**

4. Draw a schematic diagram, wiring diagram and single line diagram in which it is possible to ring a bell from three different push buttons located at three different places. The bell should ring by pressing any of the three push buttons but the bell should continue to ring till it is put off by pressing a separate push button. Adopt looping system of wiring. **(20 marks)**

5. (a) Apply drawing techniques and drawing instruments to draw symbols of the following electronic components.
   (i) Tunnel diode
   (ii) Photo cell
   (iii) Varactor diode
   (iv) Adjustable inductor
   (v) Fixed resistor

**(05 marks)**



Find more free educational resources at:
http://maktaba.tetea.org

(b) Prove the following Boolean identity: $(A+B)(A+\overline{B})(\overline{A}+C)=AC$ **(05 marks)**

(c) (i) Using truth table, prove that $A+\overline{A}B=A+B$.
(ii) Draw the logic circuits for the expression $A+\overline{A}B$. **(10 marks)**

6. (a) Explain the importance of lettering in drawing. **(02 marks)**

(b) (i) You are required to demonstrate how to make a scale drawing in your class. Use the shaft-bracket shown pictorially in Figure 4, explains procedures you will follow to make a scale drawing.
(ii) What requirements will you need to illustrate a scale drawing in 6 (b) (i) above?

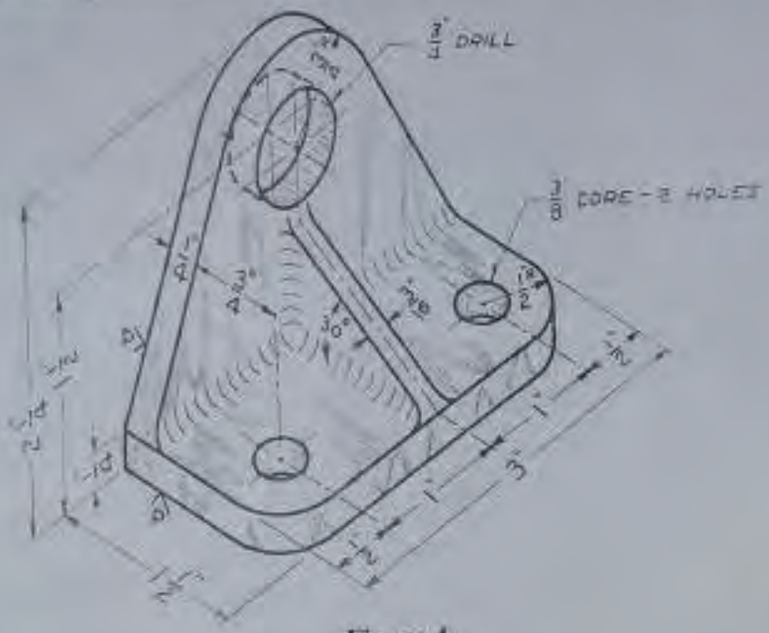


**(18 marks)**

**Figure 4**



Find more free educational resources at:
http://maktaba.tetea.org