THE UNITED REPUBLIC OF TANZANIA
NATIONAL EXAMINATIONS COUNCIL
CERTIFICATE OF SECONDARY EDUCATION EXAMINATION

084

ELECTRICAL DRAUGHTING

(For Both School and Private Candidates)

Time: 3 Hours **Tuesday, 08th November 2016 p.m.**

Instructions

1. This paper consists of **six (6)** questions.
2. Answer question **1** and any other **three (3)** questions.
3. Question 1 carries 40 marks while other questions carry 20 marks each.
4. Calculators and cellular phones are **not** allowed in the examination room.
5. Write your **Examination Number** on every page of your answer booklet(s).

Find more free educational resources at:
http://maktaba.tetea.org

1. For the given block in the Figure 1, draw its plan, front and end elevation in third angle projection looking from the direction of the arrow.

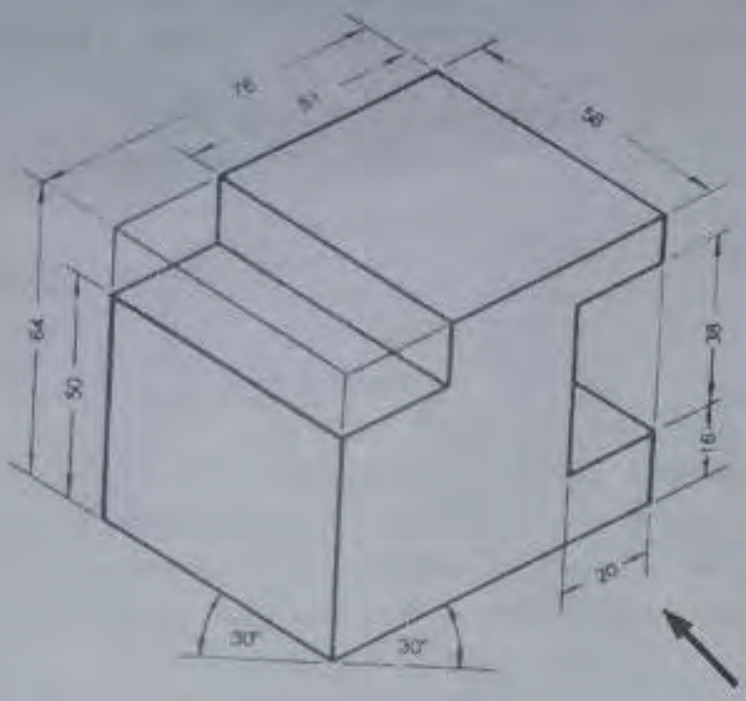

Figure 1

2. Develop a circuit diagram from the installation shown in the Figure 2.

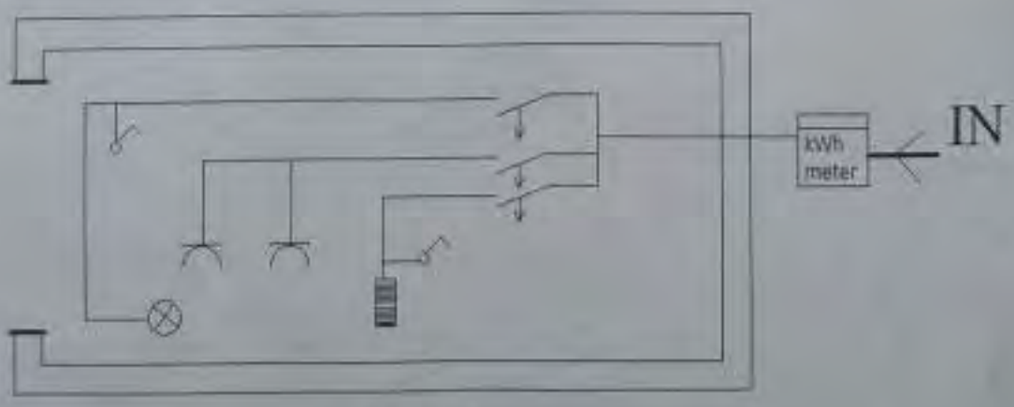

Figure 2

Find more free educational resources at:
http://maktaba.tetea.org

3. (a) Redraw the circuit diagram shown in Figure 3 as a formal diagram.

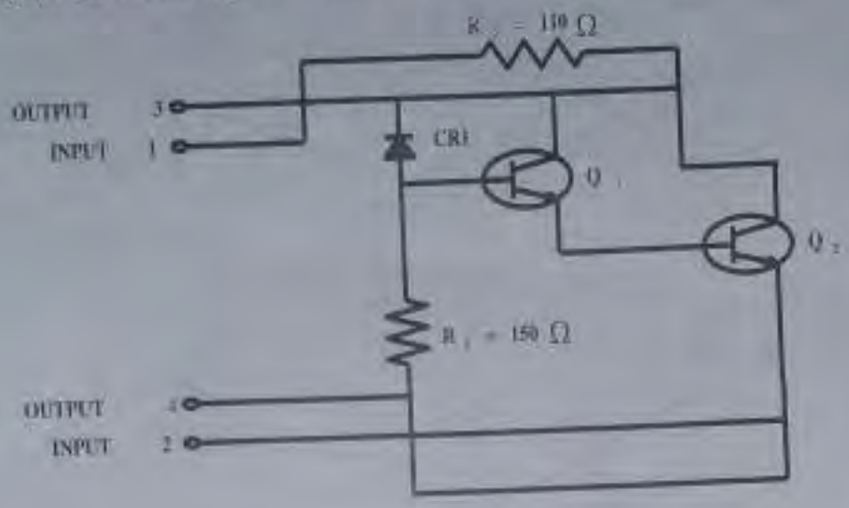

Figure 3

(b) Draw a well labeled smoothed bridge rectifier circuit connected to a step down transformer. Show its output and input wave forms.

4. Sketch the neat international symbols of the following:
   (a) Water heater (boiler)
   (b) Thermistor.
   (c) Triple pole isolator.
   (d) First angle projection.
   (e) Air condition.
   (f) Refrigerator.
   (g) Deep freezer.
   (h) Freezer.
   (i) Spring return switch with one NC contact.
   (j) Spring return switch with one NO contact.

5. (a) (i) What is an isometric drawing?
   (ii) What type of a pencil is used for construction and border lines? Give reasons.

Find more free educational resources at:
http://maktaba.tetea.org

(b) Figure 4 is an angle dimension of the obtuse and acute corners of an isometric drawing. Sketch it and indicate the value of the angles shown.

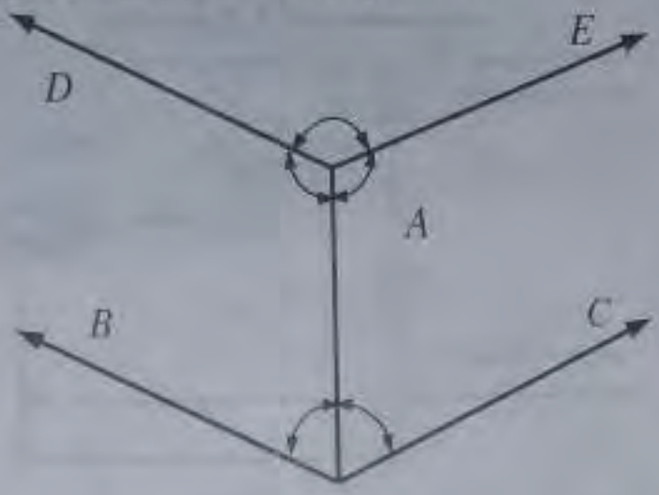

Figure 4

6. (a) By using two-two way switches (SW 1 & SW 2) and two lamps (L1 & L2), design and draw a wiring diagram such that, either:

(i) SW 1 and SW 2 will operate L1 and L2 in parallel.

(ii) SW 1 and SW 2 will operate L1 and L2 in series,

(iii) SW 1 and SW 2 will operate only one lamp (L1 or L2), or

(iv) SW 1 and SW 2 can switch off both lamps.

(b) For each case in 6(a) (i), (ii), (iii) and (iv), state the position of SW 1 and SW 2 to operate L1 and L2 to satisfy the given conditions.

Find more free educational resources at:
http://maktaba.tetea.org