THE UNITED REPUBLIC OF TANZANIA
NATIONAL EXAMINATIONS COUNCIL
CERTIFICATE OF SECONDARY EDUCATION EXAMINATION

082

ELECTRICAL ENGINEERING SCIENCE

(For Both School and Private Candidates)

Time: 3 Hours **Tuesday November 9, 2004 p.m.**

Instructions

1. This paper consists of sections A, B and C.
2. Answer **all** questions in sections A and B and **three (3)** questions from section C.
3. Cellular phones are **not** allowed in the examination room.
4. Electronic calculators are **not** allowed in the examination room.
5. Write your **Examination Number** on every page of your answer booklet(s).

This paper consists of 4 printed pages.

Find more free educational resources at:
http://maktaba.tetea.org

Scanned by CamScanner

SECTION A (10 marks)

Answer **all** questions in this section.

1. For each of the items (i) -(x) choose the correct answer from among the given alternatives and write its letter beside the item number.

(i) The S.I. unit of the luminous flux is

A candela B lumens C lux D lumen per watt E weber.

(ii) When the length of a conductor is increased its resistance

A increases B becomes zero C decreases
D remains constant. E doubles

(iii) A current of 5A flows in a 10-ohm resistor for 10 minutes. The energy consumed is

A 150 J B 250 J C 2500 J D 150 KJ E 25 KJ.

(iv) Four (4) cells each of e.m.f. of 1.5 V and internal resistance of 1.2 ohms, are connected in parallel. Its equivalent internal resistance is ------ .

A 4.8 B 0.6 C 0.3 D 1.2 E 3.6

(v) The efficiency of a transformer having no losses is

A zero B unity C maximum
D minimum E. lowest.

(vi) The mounting height of a lamp having 100 c.d. and giving the illumination of 25 lux directly below it is ------ m.

A 1.0 B 10 C 4.0 D 2.0 E 3.5

(vii) Given that, the maximum power in an a.c. circuit is 100 W, its r.m.s. value is ----- W.

A 70.7 B 100 C 7.07 D 707 E 80.5

(viii) A d.c. motor that is not allowed to run without load is a ------- motor.

A series B shunt C repulsion D compound
E parallel operated

(ix) A coil having a resistance of 10 ohms and inductance of 0.5 henry, connected to a supply of frequency of 50 Hz, has a reactance of ----- .

A 75 B 150 C 157 D 314 E 212

(x) The phase voltage of a certain circuit is 231 V. Its line voltage is approximately --- V.

A 133 B 400 C 230 D 250 E 240

SECTION B (30 marks)

Answer **all** questions in this section.

2. The resistance of a wire depends on **four (4)** factors. One factor is its length. Write down the remaining **three (3)** factors.

Find more free educational resources at:
http://maktaba.tetea.org

Scanned by CamScanner

3. The current supplied to a certain load is given by i = 25 sin 314 t (Amps). Calculate:-

(a) The frequency of the supply. (b) The maximum current supplied.

4. A 1.0 kW kettle contains 1.0 litres of water at 15°C. If the efficiency of the kettle is 0.85 per unit, what will the time for the water to boil be? Assume 1 litre = 1 kg and the specific heat capacity of water as 4.2 J/gk. (time in minutes).

5. (a) What instrument is used to measure the specific gravity of a battery?

(b) Name two (2) defects of a primary cell.

6. (a) State Kirchhoff's current law.

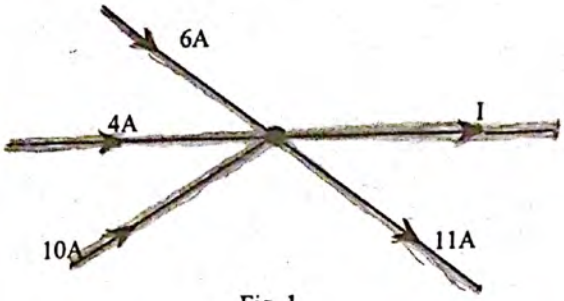

Fig. 1

(b) Calculate the value of current I in the circuit given in Figure 1.

7. A wire, 0.2 m long, is moved at a speed of 2 m/s across a magnetic flux density of 0.2 T. What will the induced emf in the wire (in mv) be?

8. What is the cost of using an electric motor rated at 250 V, 3 kW for 10 hours, if the cost of electric energy is shs. 30 per unit?

9. The slip of an a.c. machine is 4 %. If the frequency of the rotor current is 2.4 Hz, what will the frequency of the supply be?

10. A 16 c.d. lamp is kept 4 m from the screen of a photometer bench. Calculate the distance of the second lamp of 100 c.d., kept on another side of the screen, so that the illuminations on both sides of the screen are equal.

11. Convert the following units into the convenient units stated in standard form.

(a) 20 μA into mA (b) 15 pF into μF (c) 7500000 cm into km.

SECTION C (60 marks)

Answer **three (3)** questions from this section.

12. (a) Define the following terms as referred to instruments:

(i) Shunt. (ii) Multiplier.

(b) A moving coil instrument has a resistance of 40 ohms and it gives a full scale deflection on a current of 20 mA.

(i) Calculate the necessary resistance to enable the instrument read as voltmeter up to 100 V.

(ii) Calculate the resistance required to enable the instrument read as an ammeter up to 100 A.

Find more free educational resources at:
http://maktaba.tetea.org
Scanned by CamScanner

13. (a) Name the **three (3)** types of self excited d.c. motor in use.

(b) A short shunt compound motor takes 20 A from a supply of 200 V. If its series field, armature and shunt field resistances are 0.5 Ω, 0.2 Ω and 190 Ω respectively, calculate the

(i) Shunt field current.

(ii) Armature current.

(iii) Emf generated.

14. A twin core cable is supplied on both ends and is used to supply currents to the loads X and Y as shown in figure 2 below. If the resistance per 100 m run of a single core is 0.1 Ω, calculate the p.d. across each load point.

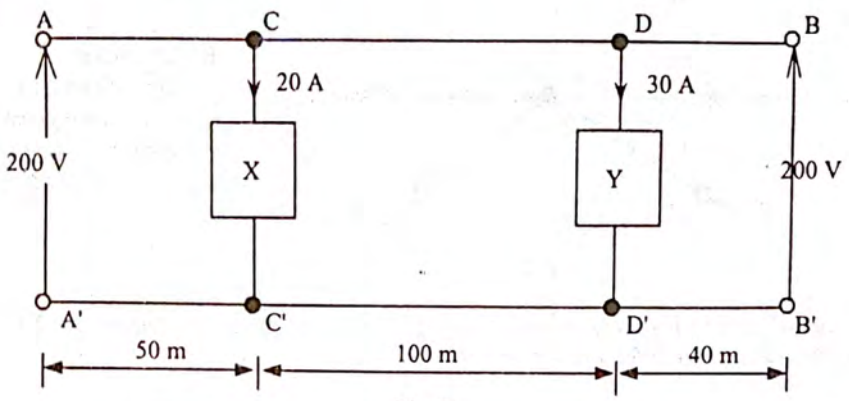

Fig. 2

15. An a.c. motor develops a power of 40 kW with an efficiency of 80 % when rotating at a speed of 1450 r.p.m. Assuming a slip of 4 %, calculate the:

(a) Power input to the motor.

(b) Synchronous speed of the motor.

16. (a) Define the term 'capacitance' as applied to capacitors and state its SI units.

(b) In the given circuit below, calculate the:

(i) Equivalent capacitance.

(ii) Total charge supplied in (μC).

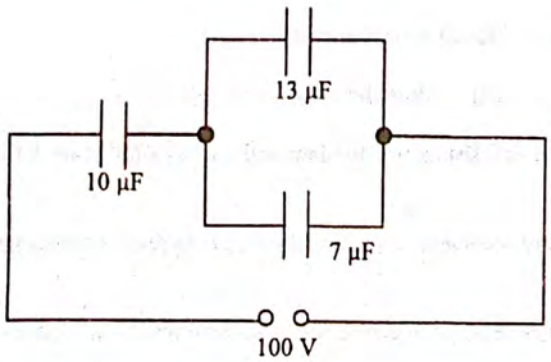

Find more free educational resources at:
http://maktaba.tetea.org
Scanned by CamScanner