THE UNITED REPUBLIC OF TANZANIA
NATIONAL EXAMINATIONS COUNCIL
CERTIFICATE OF SECONDARY EDUCATION EXAMINATION

082

ELECTRICAL ENGINEERING SCIENCE

(For Both School and Private Candidates)

Time: 3 Hours ***Tuesday*, October 18, 2005 p.m.**

Instructions

1. This paper consists of sections A, B and C.
2. Answer **all** questions in sections A and B and **three (3)** questions from section C.
3. Electronic calculators are **not** allowed in the examination room.
4. Cellular phones are **not** allowed in the examination room.
5. Write your **Examination Number** on every page of your answer booklet(s).

CPB

This paper consists of 4 printed pages.

Find more free educational resources at:
http://maktaba.tetea.org

Scanned by CamScanner

SECTION A (10 marks)

Answer **all** questions in this section.

1. For each of the items (i) - (x) choose the correct answer from among the given alternatives and write its letter beside the item number.

(i) Lumen/m^2 is the SI unit for

A illumination
B light source
C luminous intensity
D luminous flux
E space height ratio.

(ii) The solution used in batteries to generate electromotive force is known as

A hydrogen gas
B electrolyte
C copper solution
D H_3SO_4
E sodium chloride.

(iii) The instrument which can be affected by magnetic field when used is known as

A moving iron instrument
B voltmeter
C moving coil instrument
D ammeter
E photometer.

(iv) Total current in a circuit can be measured by connecting an ammeter

A in series with the load
B in parallel with the load
C in parallel series with the load
D in series parallel with the load
E across the supply.

(v) The main parts of an alternator are

A salient pole and smooth cylindrical pole
B armature and pole
C stator and rotor
D poles, yoke, commutator and armature
E commutator, armature and rotor.

(vi) Power triangle is formed by three components which are

A impedance, resistor and inductive reactance
B capacitance, inductive reactance and reactive power
C reactive power, apparent power and true power
D true power, inductive reactance and capacitive reactance
E impedance, inductive reactance and power factor.

(vii) Electromotive force is

A voltage obtained in a circuit when there is no load connected
B current obtained in a circuit when there is load connected
C voltage measured in a circuit when there is load connected

Find more free educational resources at:
http://maktaba.tetea.org

Scanned by CamScanner

D current measured in a circuit when there is no load connected
E the voltage generated by a circuit.

(viii) Impedance is the

A total opposition to the flow of current in a.c. circuits
B flow of power in circuits
C total inductance in circuits
D total opposition to the flow of voltage in a circuit
E power factor of the circuit.

(ix) The extra low voltage of d.c. supply is

A 220 V
B 30 V
C 50 V
D 110 V
E 230 V.

(x) The range of an ammeter can be extended by connecting a shunt resistor with a load

A in parallel
B in series
C series parallel
D parallel series
E across the load.

SECTION B (30 marks)

Answer all questions in this section.

2. State the functions of the following:
   (a) Oscilloscope.
   (b) Digital ammeter.
   (c) Hydrometer.
3. What is a calorie?
4. Calculate the slip of a 4 poles synchronom motor whose rator frequency is 2 Hz. The speed of the motor is 1,500 r.p.m.
5. State **three (3)** methods used to charge lead acid cells.
6. List down the types of a.c. alternators.
7. List down **six (6)** sources of electricity.
8. State **three (3)** cooling systems of a transformer.
9. Define the term "armature reaction" of a d.c. generator.
10. Two capacitors of 15μF each are connected in series across 240 V supply. Calculate the charge flowing in a circuit.
11. Calculate the instantaneous voltage of a system which supplies a maximum voltage of 30 V at an angle of 45 °.

Find more free educational resources at:
http://maktaba.tetea.org
Scanned by CamScanner

SECTION C (60 marks)

Answer **three (3)** questions from this section.

12. A consumer heater requires an immersion heater for a tank containing 200 litres of water. The water is to be heated from 10 °C to 70 °C in 4 hours. Calculate the nearest element size in kilowatt if the efficiency of the heating system is 80 per cent.

13. Explain how sparks can be reduced in a d.c. generator. A d.c. shunt generator supplies a current of 30 A at 415 V. The armature resistance is 0.85 Ω and the field resistance is 2.5 Ω. Assuming a brush drop of 1.5 V, calculate the:

    (a) armature current.

    (b) generated voltage.

14. (a) What is the function of a centrifugal switch as used in a.c. motors?

    (b) Explain the difference between a capacitor start induction motor and an inductor start induction motor.

    (c) State **two (2)** factors upon which the output of an a.c. generator depends.

    (d) Name **four (4)** types of single phase motors.

15. A 6600/550 V, 25 KVA transformer has iron losses of 350 W and its primary and secondary winding resistances are 14.5 Ω and 0.1 Ω respectively. Determine the full-load efficiency at a power factor of

    (a) unity.

    (b) 0.6 lagging.

16. (a) State ohms law.

    (b) Examine the diagram below and answer the questions that follow.

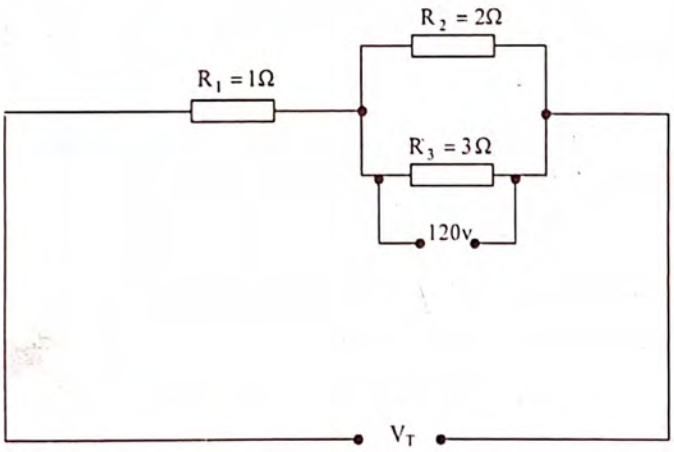

    (i) Find the total current of the circuit shown above.

    (ii) Find the total voltage of the circuit.

    (iii) Calculate the total power of the circuit.

Find more free educational resources at:
http://maktaba.tetea.org
Scanned by CamScanner