THE UNITED REPUBLIC OF TANZANIA
NATIONAL EXAMINATIONS COUNCIL
CERTIFICATE OF SECONDARY EDUCATION EXAMINATION

082

ELECTRICAL ENGINEERING SCIENCE

(For Both School and Private Candidates)

Time: 3 Hours *Wednesday, 12th October 2011 a.m.*

Instructions

1. This paper consists of sections A, B and C.
2. Answer **all** the questions in sections A and B and **three (3)** questions from section C.
3. Calculators are **not** allowed in the examination room.
4. Cellular phones are **not** allowed in the examination room.
5. Write your **Examination Number** on every page of your answer booklet(s).
6. Whenever necessary use the following constants:
   - Permitivity of free space, $\varepsilon_o = 8.854 \times 10^{-12}$ F/m.
   - Resistivity of copper may be taken as 1.7 $\mu\Omega$.mm.
   - Specific heat capacity of water = 4.18 J/gK.
   - 1 Faraday = 96,500 Coulombs.
   - 1 hp = 750 Watts.

This paper consists of 5 printed pages

Find more free educational resources at:
http://maktaba.tetea.org

Scanned by CamScanner

SECTION A (10 Marks)

Answer **all** questions in this section.

1. For each of items (i) – (x) choose the correct answer from among the given alternatives and write its letter beside the item number.

(i) The resistance of a wire is 'r' ohms. The wire is then stretched to double its length. What will be the resistance of a wire in ohms?
A $r/2$ B $4r$ C $2r$ D $r/4$ E r^2.

(ii) 'The mass of an ion liberated at an electrode is directly proportional to the quantity of electricity which passes through the electrolyte'. This statement is associated with
A Weber's theorem B Laplace law C Coulomb's law
D Gauss's theorem E Faraday's law of electrolysis

(iii) The unit of magnetic flux is
A Weber B Ampere-turn C Tesla D Coulomb E Weber per meter square.

(iv) Kirchhoff's law is applicable to
A A.C circuits only B passive networks only C A.C as well as D.C circuits
D D.C circuits only E active network only

(v) Which loss in a d.c generator significantly varies with the load current?
A Magnetic loss B Field copper loss C Armature copper loss
D Windage loss E Mechanical loss

(vi) The instruments which are free from hysteresis and eddy current losses are called
A moving iron B electrostatic C hot wire
D induction type E electro-dynamometer

(vii) Which of the following lamps has minimum initial cost of installation but maximum running cost?
A Incandescent lamp B Flourescent lamp C Mercury vapour lamp
D Neon lamp E Sodium vapour lamp

(viii) At which speed in cm/s does the light of wave travel?
A $3x10^{10}$ B $3x10^{12}$ C $3x10^{15}$ D $3x10^{18}$ E $3x10^{8}$.

(ix) The primary function of a filter in rectifier is to
A select frequency range correspond to output voltage
B minimize a.c input voltage variations
C remove ripples from the rectified output voltage
D stabilize d.c level of the rectified output voltage
E suppress odd harmonics in the rectifier output voltage

(x) The capacity of a cell is always measured in
A Watt – hours B Watts C Ampere – hours D Amperes E Watt - Amperes.

Find more free educational resources at:
http://maktaba.tetea.org

Scanned by CamScanner

SECTION B (30 Marks)

Answer **all** questions in this section.

2. Three capacitors have capacitances of 10 μF, 15 μF, and 20 μF respectively. Calculate the total capacitance when they are connected in series. **(03 marks)**

3. A 10 hp motor is used to pump water for a certain purpose for 10 hours. Calculate the
   (a) energy consumed by the motor. **(02 marks)**
   (b) cost of the energy consumed if one unit of electric energy costs 500 /=. **(01 mark)**

4. (a) Define the term *mean value* with reference to an alternating e.m.f. **(01 mark)**
   (b) The equation for an alternating current is given by $i = 28.28\ Sin\left(314t + 30^{0}\right)A$. Find its frequency. **(02 marks)**

5. (a) Draw a diagram which shows how a diode can be connected to achieve half wave rectification. **(01 mark)**
   (b) Sketch the input and output signals that an oscilloscope in (a) above would display. **(02 marks)**

6. The measured voltage across resistance R is V and the current through it is I. If the limits of systematic error in the measured values of V and I are 0.75% and 1 % respectively; and if the value of R is independently known within ± 0.5 %, which formula between $P = I^2R$ and $P = \frac{V^2}{R}$ would you recommend for computing the power consumed by R? Give reason for your answer. **(03 marks)**

7. (a) Write the expression for the resonance frequency for the L-C series circuit. **(01 mark)**
   (b) A sinusoidal voltage of peak value 10 V is applied across an inductor of 2 H inductance. This causes a current of 5 A peak value to flow through the inductor. Sketch the voltage and current waveforms on the same axes. **(02 marks)**

8. (a) What is the difference between a cell and a battery? **(01 mark)**
   (b) A battery consists of two cells joined in parallel through an external resistance of 5 Ω. If the equivalent internal resistance for the two cells is 2.5 Ω and each cell has an e.m.f of 1.5 V. What current will flow through an external resistance of 5 Ω? **(02 marks)**

9. The voltage measured by an oscilloscope is shown by the sine wave below.

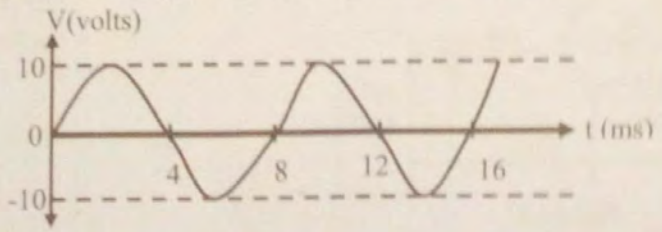

Use the graph to determine the
   (a) maximum amplitude voltage. **(0 ½ mark)**
   (b) period. **(0 ½ mark)**
   (c) frequency. **(0 1 mark)**
   (d) angular speed (leave π in your answer). **(0 1 mark)**

Find more free educational resources at:
http://maktaba.tetea.org

Scanned by CamScanner

10. State the material used to make the filaments in an incandescent lamp and then give two reasons why the material is most preferred. **(03 marks)**

11. A single phase transformer is 2:5 turns ratio. The net cross-sectional area of the core is 60 cm^2. If the primary winding is connected to a 50 Hz supply at 520 V, calculate the
    (a) voltage induced in the secondary winding. **(01 mark)**
    (b) peak value of flux density in the core. **(02 marks)**

SECTION C (60 Marks)

Answer **three (3)** questions from this section.

12. (a) Mention two indicators and then explain briefly four causes of an overloaded generator. **(06 marks)**

    (b) Describe four conditions under which a self excited d.c generator can fail to build up voltage. **(08 marks)**

    (c) A d.c generator delivers a load current of 50 A at a terminal voltage of 220 V. The total resistance of its armature circuit is 0.015 Ω and there is a 2 volts drop at the brushes. Calculate the
    (i) generator e.m.f.
    (ii) speed at which it must be driven.
    (iii) total power generated.
    Assume the number of poles is 6, separated by excited generator. Useful flux per pole is 0.025 Wb; and the number of armature conductors is 580 lap connected. **(06 marks)**

13. (a) Give three advantages and three disadvantages of dynamometer type wattmeter. **(06 marks)**

    (b) The output of a gas engine was found to be 4.7 kW. A dynamometer used to check the output contained 20 kg of water of specific heat capacity 4.18 kJ/kg°K. How much did the temperature of the water rise during a 20 minute running period? Neglect losses. **(04 marks)**

    (c) (i) With the aid of diagram, explain how two watt-meters can be used to measure total power in a star connected three phase load. **(05 marks)**

    (ii) The circuit in Figure 1 is used to measure the power consumed by the load. The current and the voltage coil of the wattmeter have 0.02 Ω and 1000 Ω resistances respectively. What will be the measured power compared to the load power.

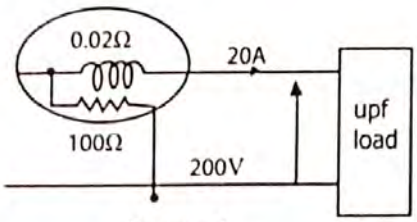

Figure 1

(05 marks)

Find more free educational resources at:
http://maktaba.tetea.org
Scanned by CamScanner

14. (a) (i) What do you understand by the term *resistivity* of a conductor? **(01 mark)**
(ii) Explain four factors in which the resistance of a conductor depends on. **(04 marks)**

(b) An aluminum wire 7.5 m long is connected in parallel with a copper wire 6 m long. When a current of 5A is passed through the combination, it is found that the current in the aluminum wire is 3A. If the diameter of the aluminum wire is 1 mm, determine the diameter of the copper wire. **(09 marks)**

(c) A piece of silver wire has a resistance of 1 Ω. What will be the resistance of a manganin wire half the length and half the diameter, if the specific resistance of manganin is 30 times that of silver? **(06 marks)**

15. (a) Give two differences between series and parallel circuits. **(02 marks)**
(b) Consider the circuit shown in Figure 2. Calculate the
(i) total current. **(09 marks)**
(ii) power dissipated in 6 Ω and 7 Ω resistors. **(09 marks)**

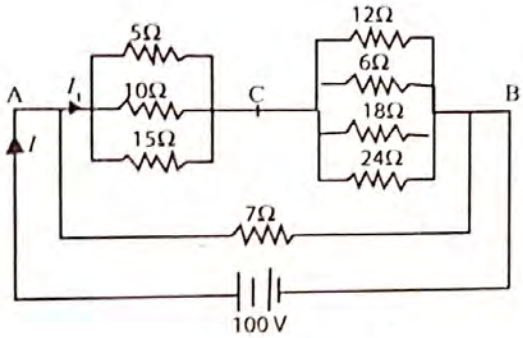

Figure 2

16. (a) Give the units and symbols of the following quantities:
(i) Illumination or illuminance (ii) Luminous intensity (candle power)
(iii) Luminance or brightness (iv) Luminous flux **(04 marks)**

(b) Two lamps A and B of 200 candela and 400 candela respectively are situated 100 m apart. The height of A above the ground level is 10 m and that of B is 20 m. If a photometer is placed at the centre of the line joining the two lamp posts, calculate its reading. **(08 marks)**

(c) The illumination of a drawing office 30 m x 10 m have a value of 250 lux and is to be provided by a number of 300 W filament lamps. If the utilization factor is 0.4 and the depreciation factor is 0.9. Determine the number of lamps required. The efficiency of each lamp is 14 lumens per watt. **(08 marks)**

Find more free educational resources at:
http://maktaba.tetea.org
Scanned by CamScanner