THE UNITED REPUBLIC OF TANZANIA
NATIONAL EXAMINATIONS COUNCIL
CERTIFICATE OF SECONDARY EDUCATION EXAMINATION

082

ELECTRICAL ENGINEERING SCIENCE

(For Both School and Private Candidates)

Time: 3 Hours **Friday, 07th November 2014 p.m.**

Instructions

1. This paper consists of sections A, B and C.
2. Answer **all** questions in sections A and B and **three (3)** questions from section C.
3. Non programmable calculators may be used.
4. Cellular phones are **not** allowed in the examination room.
5. Write your **Examination Number** on every page of your answer booklet(s).

F 4 2 0 1 4 0 8 2

Find more free educational resources at:
http://maktaba.tetea.org

Scanned by CamScanner

SECTION A (10 Marks)

Answer **all** questions in this section.

1. For each of items (i) – (x), choose the correct answer from among the given alternatives and write its letter beside the item number in your answer booklet.

(i) In half wave rectifier circuit, diode conducts current when the
A a.c input voltage is at its average value from zero
B anode is made positive by positive a.c input voltage
C plate is made negative by negative a.c input voltage
D cathode is made positive by square input voltage
E cathode is made less negative by input voltage.

(ii) Electrolyte of a battery might be used to determine the status of a battery charge by looking at its
A level B temperature C specific gravity D colour E density.

(iii) Which of the following material is not used as fuse material?
A Silver B Magnesium C Aluminium D Copper E Carbon.

(iv) Which of the following remain constant inside a charged conducting sphere?
A Electric intensity B Electric charge C Electric field
D Electric flux E Electric potential.

(v) Bronze is an alloy of
A copper and zinc B copper and tin C copper and lead
D copper and silver E copper and nickel.

(vi) When the rotor of an induction motor is standstill, the value of slip is
A two B zero C four D infinite E one.

(vii) Which of the following must match for d.c generators to operate in parallel?
A Polarities and speed B Phase sequences and voltages C Polarities and voltages
D Speed and efficiency E Phase sequences and efficiency.

(viii) A solar cell is the same as
A photo-emissive cell B photometer cell C photoconductive cell
D photovoltaic cell E photodiode cell.

(ix) Lumen/watt is the unit of
A luminous intensity B light flux C luminous flux D brightness E illuminance.

(x) A transformer core is laminated in order to
A minimize copper loss B minimize eddy current loss C reduce running cost
D reduce hysteresis loss E eliminate magnetic fields.

Find more free educational resources at:
http://maktaba.tetea.org

Scanned by CamScanner

SECTION B (30 Marks)

Answer **all** questions in this section.

2. Figure 1 shows one node of an electric circuit. Use Kirchhoff's current law to find V_2. Given $i_1 = 4$ A, i3 = 1A and $i_4 = 2$A.

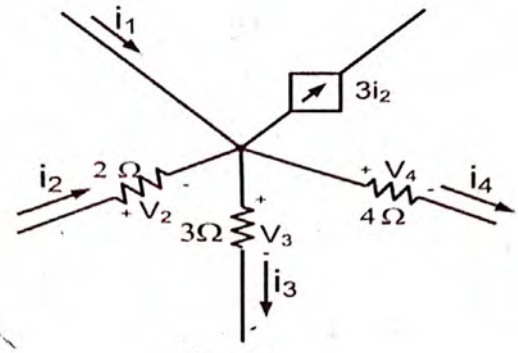

Figure 1

3. A cell of e.m.f 1.5 V and internal resistance of 2 Ω is connected in series with an ammeter of resistance 0.5 Ω and 5 Ω resistances. What will be the
   (i) ammeter reading.
   (ii) potential difference across the terminals of the cell.

4. (a) What is d.c generator?
   (b) A generator is connected to a load having terminal voltage of 480 V and a current of 8 A flows when the load is connected. If the armature resistance is 1 Ω, determine the generated voltage.

5. (a) Differentiate magnetic circuit from electric circuit.
   (b) A conductor of length 5 cm is kept in a magnetic field having the flux density of 1.8 tesla. If the current flowing is 0.8 A; calculate the maximum force exerted by a conductor.

6. Calculate the power dissipated if the bulb of 100 W, 200 V is mistakenly connected to 100 V.

7. The design requirements of a 6000/450V, 50 Hz core type transformer are: approximate e.m.f/turn = 15 V and maximum flux density is 1 Wb/m^2. Calculate suitable number of primary turns and the net cross sectional area of the core.

8. (a) What is the importance of using a starter in d.c motors?
   (b) A d.c motor connected to a 460 V supply has an armature resistance of 0.2 Ω. Find the back e.m.f, if the armature current is 120 A.

9. Two watt-meters are connected to measure power in a three-phase circuit. One of the watt-meter reads 500 W and the other points out in the reverse direction. After reversing the voltage coil terminals, the reading of this watt-meter is found to be 200 W. Determine the power factor of the load.

Find more free educational resources at:
http://maktaba.tetea.org
Scanned by CamScanner

10. (a) State the inverse square law of illumination.
(b) A lamp is mounted 4 m above the floor and it has an intensity of 100 cd. Calculate the maximum illumination given by the lamp.

11. Find the expression for the current when a voltage $e = 283 \text{ Sin} \left(100\pi t - \frac{\pi}{4}\right)$ is applied to a coil having resistance of 50 Ω and an inductive reactance of 1 Ω.

SECTION C (60 Marks)

Answer **three (3)** questions from this section.

12. (a) (i) Give the relationship between the line and phase current in delta connected circuit.

(ii) With the aid of diagram differentiate between series, shunt and compound d.c machines according to the winding connections. **(04 marks)**

(b) A three phase, 415 V star connected motor has an output of 50 kW with an efficiency of 90% and a power factor of 0.85.
(i) Calculate the line current.
(ii) If the motor windings were connected in delta; What would be the correct voltage of a three phase supply suitable for the motor? **(08 marks)**

(c) A 4-pole, 50 Hz induction motor has a slip of 1% at no load. When operated at full load, the slip is 2.5%. Find the change in speed from no load to full load. **(08 marks)**

13. (a) A water heater having an element of 3 kW is used to heat 140 litres of water from 10^0C to 60^0C in 3 hours. Determine the efficiency of the heater. Assume the specific heat capacity of water is 4.2 kJ/kgK and 1 litre of water equal 1 kg. **(07 marks)**

(b) A 240 V d.c electric furnace is used to raise the temperature of 3.6 kg of brass from 16^0C to the annealing temperature of 593^0C in 30 minutes at an overall efficiency of 80 %. Assuming the specific heat capacity of brass is 377 J/kgK. Calculate the
(i) resistance of the heating element.
(ii) current taken from the supply.
(iii) power absorbed.
(iv) total energy used in kWh. **(13 marks)**

14. (a) (i) Two capacitors C_1 and C_2 are connected in parallel across a supply of V (Volts) and a charge of Q (Coulombs) is produced. Show that, the equivalent capacitance is given by $C = C_1 + C_2$.

Find more free educational resources at:
http://maktaba.tetea.org
Scanned by CamScanner

(ii) You need 10 μF capacitance in a certain application. The only available capacitance in store is of value 0.05 μF only. How can you get the total capacitance that you need? **(08 marks)**

(b) For the circuit shown in Figure 2; find the
(i) equivalent capacitance.
(ii) voltage across a parallel group.
(iii) total charge in (μC).

(iv) total energy stored in (mJ). **(12 marks)**

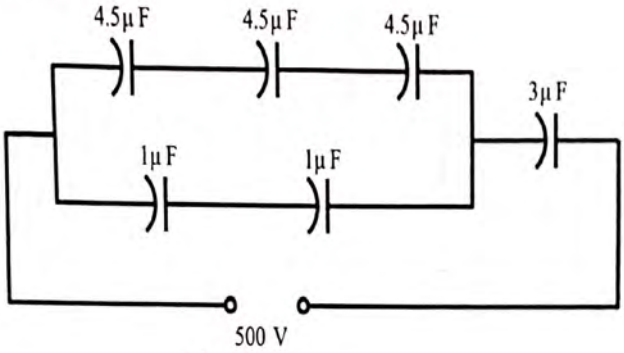

Figure 2

15. (a) With the help of diagrams, explain the difference between half wave and full wave rectification. **(04 marks)**

(b) If you trouble shoot the rectified power supply system and find out that there is either *no* or *low* d.c output; what situations might cause this problems to occur? Give three causes in each case. **(03 marks)**

(c) Consider the half wave rectifier circuit shown in Figure 3.

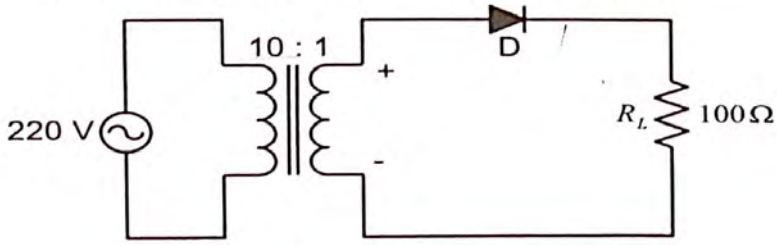

Figure 3

Determine:
(i) maximum and r.m.s values of load voltage.
(ii) peak and r.m.s values of load current.
(iii) r.m.s value of ripple voltage.
Neglect resistance of secondary transformer and that of the diode. **(13 marks)**

16. (a) Two resistors of values 1 kΩ and 4 kΩ are connected in series across a constant voltage supply of 100 V. A voltmeter having an internal resistance of 12 kΩ is connected across the 4 kΩ resistor. Calculate:

Find more free educational resources at:
http://maktaba.tetea.org
Scanned by CamScanner

(i) true voltage across 4 kΩ resistor before the voltmeter was connected.
(ii) actual voltage across 4 kΩ resistor recorded by the voltmeter.
(iii) change in supply current when the voltmeter is connected.
(iv) percentage error in voltage across 4 kΩ resistor. **(13 marks)**

(b) From the given circuit diagram shown in Figure 4; find the
(i) reading of the ammeter.
(ii) value of R. **(07 marks)**

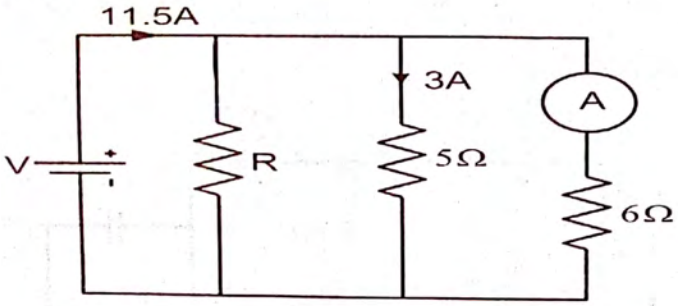

Figure 4

Find more free educational resources at:
http://maktaba.tetea.org
Scanned by CamScanner