MAKTABA

THE UNITED REPUBLIC OF TANZANIA
NATIONAL EXAMINATIONS COUNCIL
CERTIFICATE OF SECONDARY EDUCATION EXAMINATION

035

ENGINEERING SCIENCE
(For Both School and Private Candidates)

Time: 3 Hours **Monday, 15th October 2012 a.m.**

Instructions

1. This paper consists of sections A, B and C.
2. Answer **all** the questions in sections A and B and **three** (3) questions from section C.
3. Calculators are **not** allowed in the examination room.
4. Cellular phones are **not** allowed in the examination room.
5. Write your **Examination Number** on every page of your answer booklet(s).
6. Acceleration due to gravity: $g = 10\ m/sec^2$.

MAKTABA

Find more free educational resources at:
http://maktaba.tetea.org

SECTION A (10 Marks)

Answer **all** questions in this section.

1. For each of the items (i) – (x), choose the correct answer from the given alternatives and write its letter beside the item number.

(i) The internal and external diameters of conduit tube can be obtained by using a
A micrometer screw gauge B beam balance C meter rule
D lever balance E Vernier calipers.

(ii) A physical quantity which changes a body's state of rest or of uniform motion in a straight line is called
A Pressure B Energy C Work done D Force E Inertia of a body.

(iii) The work done in kilojoules in lifting a mass of 850 kg through a vertical height of 36 m is
A 306.0.2 kJ B 30.6 kJ C 3060 kJ D 3.060 kJ E 0.306 kJ.

(iv) The machine which is valued as a perfect one has an efficiency of
A 75% B 50% C 85% D 100% E 55%.

(v) Five cells, each with an emf of 2V and internal resistance of 0.5Ω, are connected in series. Therefore the resulting battery will have an emf and an internal resistance of
A 2V and 0.5Ω B 10V and 2.5Ω C 2V and 0.1Ω
D 10V and 0.1Ω E 2V and 2.5Ω.

(vi) The area under velocity-time graph is numerically equal to
A Displacement B Velocity C Distance
D Acceleration E Deceleration.

(vii) The angle subtended at the centre of the circle by an arc whose length is equal to the radius of the circle is known as
A Omega B Angular Velocity C Radian
D Arc length E Radius of curvature.

(viii) The young's Modulus of elasticity given by 400Gpa is equivalent to
A $4Mpa/mm^2$ B $400MPa/mm^2$ C $4kN/mm^2$
D $400kN/mm^2$. E $400MN/mm^2$.

(ix) A steel brake rod is 1.25m long, and when subjected to a pull, the extension produced is 0.5mm. Hence the strain in the rod is equal to
A 0.4 B 0.0004 C 1.3 D 2.5 E 0.004

(x) What is the name of the product of 'repetition of the fundamental note' of a sound?
A Beats B Tones C Reverberation
D Harmonics E Echos.

Find more free educational resources at:
http://maktaba.tetea.org

SECTION B (30 Marks)

Answer **all** questions in this section.

2. (a) (i) State the use of vernier caliper.
   (ii) Name two properties of micrometer screw gauge which makes it to differ from vernier caliper?
   (b) What is the reading of the vernier caliper in Figure 1?

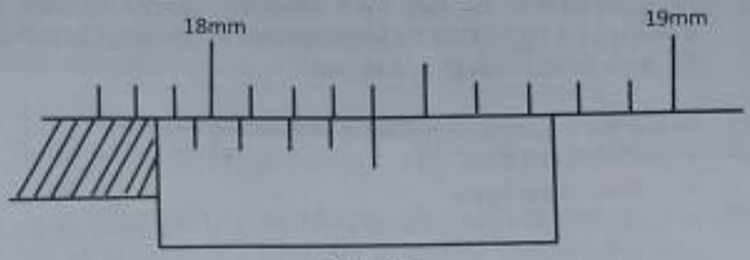

Figure 1

3. (a) What is volume expansivity?
   (b) The apparent volume expansivity of alcohol in glass is $1.55 \times 10^{-4}/^{\circ}C$. Calculate the absolute volume expansivity of alcohol in glass if the linear expansivity of glass is $9 \times 10^{-6}/^{\circ}C$.

4. (a) Differentiate acceleration from velocity.
   (b) A car travelling at 36km/hr accelerates uniformly at $2\ m/s^2$. Find its velocity in km/hr in 5 second of time.

5. (a) Define torque with regards to engineering science.
   (b) The energy is transmitted from the shaft of an engine by a belt passing over a pulley having a diameter of 600mm. The effective pull on the belt is 2.8kN. Calculate the torque in Newton-meters.

   (a) Define frequency.
   (b) When a wire is adjusted to a length of 60cm and plunked, it produces the same note as a turning fork of frequency 256Hz. What frequency of the turning fork which would be in tune with the same wire adjusted to length of 40cm and the same tension?

7. (a) What does 'real is positive' (RP) mean with regards to mirror formulae?
   (b) A convex mirror of focal length 18cm produced an image 6cm away from the pole (vertex). Find the object distance (use the R.P sign convention).

8. Briefly explain three points to show why mercury should be preferred rather than alcohol as thermometric liquid?

9. (a) State the following laws as applied in engineering science.
   (i) Faraday's law of electromagnetic induction.
   (ii) Lenz's law of electromagnetic induction.

Find more free educational resources at:
http://maktaba.tetea.org

(b) State Fleming's right-hand rule.

10. (a) What is the use of galvanometer in electricity?

(b) A galvanometer of resistance 5Ω gives a full scale deflection with a current of 15mA. How would you convert it into a voltmeter reading 1.5 volts?

11. Sketch and name four parts of a Gold-leaf electroscope, and state its use.

SECTION C (60 Marks)

Answer **three (3)** questions from this section.

12. (a) (i) What do you understand by the term resistivity of the material? **(1 mark)**

(ii) Determine the resistance of the wire when given an iron wire of 0.5m length and a diameter of 1.6mm. What will be the current in the wire if it is connected to a 9V battery? (Take resistivity of iron (ρ) as $9.71 \times 10^{-8}\Omega m$.) **(4 marks)**

(b) (i) What is a 'hot wire ammeter'? **(1 mark)**

(ii) Figure 3 shows a circuit of electricity; determine the current reading on the ammeter in the circuit and Compute the current passing through resistor 3Ω. **(7 marks)**

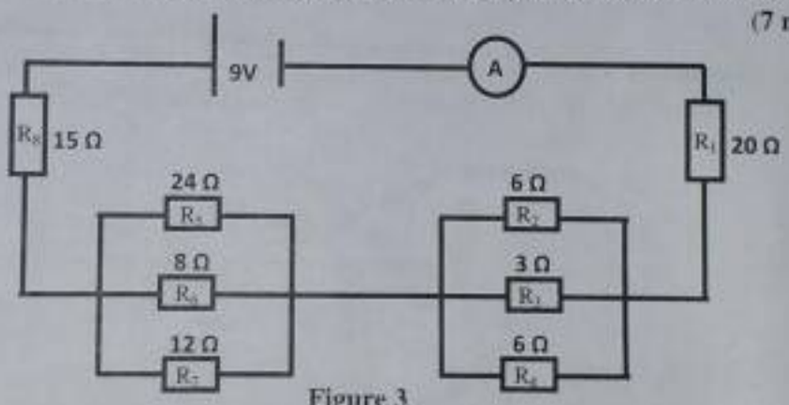

Figure 3

(c) (i) What is the different between secondary coil and primary coil with regard to electrical transformer? **(2 marks)**

(ii) A step up transformer has 10,000 turns in the secondary coil and 100 turns through the primary coil. An alternating current of 5.0A flows in the primary circuit when connected to a 12V a.c. supply. Calculate the voltage across the secondary coil. If the transformer has an efficiency of 90%, what is the current in the secondary coil? **(5 marks)**

Find more free educational resources at:
http://maktaba.tetea.org

13. (a) (i) Define the terms work and energy. **(2 marks)**

(ii) A car is pushed up a slope by a constant force of 25000 Newton at a uniform speed of 12 metres per second. It takes 240 second to complete the journey. How much work in mega joules is done in getting the car to the top of the slope? **(4 marks)**

(b) (i) State Newton second and third laws of motion. **(2 marks)**

(ii) A body of mass 5kg is projected up a board inclined at 30° to the horizontal with an initial velocity of 6 m/s. If the frictional force opposing its motion is 4.5 N, with the aid of fully labeled sketch, find the distance it travels before coming to rest and its increase in potential energy at the end of the run. **(12 marks)**

14. (a) (i) List down five component colours of white light.

(ii) Indicate how the rainbow colours can be obtained from white light using a glass prism.

(iii) State the property that component colours of white light have in common. **(7.5 marks)**

(b) (i) What does 'magnification of image' mean?

(ii) Define 'principal focus' of the lens.

(iii) An object 3cm high is placed 30 cm away from a concave mirror of focal length 12 cm. Using the mirror formular, calculate the position, height and nature of the image formed. **(7.5 marks)**

(c) A ray of a light is incident on the air-glass boundary as shown in Figure 4. If the refractive index of the glass is 1.5 determine the angle of incident. **(3 marks)**

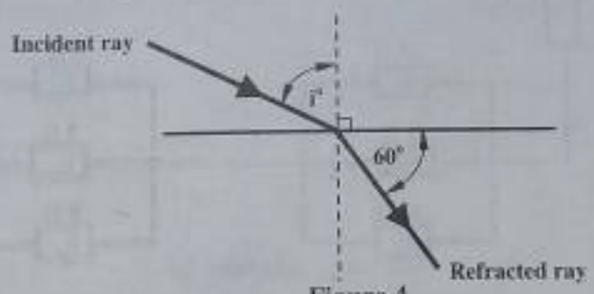

Figure 4

(d) A coin at the bottom of a jar of glycerine appears to be 13.2 cm below the surface of the glycerine. Calculate the height of the column of glycerine in the jar given that the refractive index of glycerine is 1.47. **(2 marks)**

15. (a) Illustrate three ways in which heat differs from temperature. **(3 marks)**

(b) (i) Why a glass tumbler breaks when hot liquid is poured into it?

(ii) Define tensile strain and Young's modulus of elasticity.

(iii) A wire 3m long and 3.15 mm diameter is extended by 0.9mm when a tensile force of 200N is applied to it. Calculate the Young's modulus of elasticity for the material of the wire, assuming that the elastic limit has not been exceeded. **(9.5 marks)**

Find more free educational resources at:
http://maktaba.tetea.org

(c) (i) Define standard atmospheric pressure.

(ii) A U-tube has open ends and is partly filled with mercury. One limb is connected to an apparatus such that the pressure is 34 kN/m^2 above atmospheric pressure, and the other end is open to the atmosphere. With the aid of the fully labeled sketch, find the vertical difference between the levels of the mercury in the two limbs. Density of mercury is 13.6×10^1 kg/m^3 and density of water is $1000 kg/m^3$ **(7.5 marks)**

16. (a) (i) What is an angular displacement.

(ii) In an experiment, the time for a wheel to make 25 complete revolutions was found to be 14 sec. Find the rotation speed of the wheel in rad/sec. What will be the angle turned through in 5 second? **(4.5 marks)**

(b) (i) Define the following as applied in engineering science.

- Centripetal force.
- Centrifugal force.

(ii) A car is driven round a corner at 60 km/h. If the radius of the corner is 25 m what is the angular velocity of the car as it goes round the corner? Suppose the car's wheels are 0.6 m in diameter. Compute the angular velocity of the wheels in revolution per second when the car is travelling at 100km/h. **(6.5 marks)**

(c) (i) Why overall workdone by machine is always greater than work output?

(ii) Compute the overall workdone by machine and the value of the effort if the machine has an efficiency of 75% and it raises a load of 450N at a height of 9 metres whilst its effort travels a distance of 45 metres in its direction. **(9 marks)**

MAKTABA

Find more free educational resources at:
http://maktaba.tetea.org