THE UNITED REPUBLIC OF TANZANIA
NATIONAL EXAMINATIONS COUNCIL
CERTIFICATE OF SECONDARY EDUCATION EXAMINATION

035

ENGINEERING SCIENCE

(For Both School and Private Candidates)

Time: 3 Hours **Monday, 10th November 2014 a.m.**

Instructions

1. This paper consists of sections A, B and C.
2. Answer **all** the questions in sections A and B and any **three (3)** questions from section C.
3. Calculators are **not** allowed in the examination room.
4. Cellular phones are **not** allowed in the examination room.
5. Write your **Examination Number** on every page of your answer booklet(s).
6. Acceleration due to gravity: $g = 9.81\ m/sec^2$.
7. Density of mercury: $\rho = 13600\ kg/m^3$.

SECTION A (10 Marks)

Answer **all** questions in this section.

1. For each of the items (i) – (x), choose the most correct answer among the given alternatives and write its letter beside the item number.

(i) The note from a plucked guitar will have a low pitch if the string is
A Thick and long B Thick and slack C Thin and shot
D Thin and long E Thick and tight.

(ii) An electromagnet is made by passing an electric current through
A carbon steel B hard iron C soft cast iron
D soft iron E soft steel.

(iii) Electricity current produces the following effects:
A heating, magnetic and cooling B chemical, magnetic and attraction
C heating, magnetic and chemical D heating, chemical and cooling
E heating, magnetic and attraction.

(iv) Figure 1 shows the velocity (v) – time (t) graph. Which of the following graphs shows the speed of a ball thrown vertically upwards from the ground?

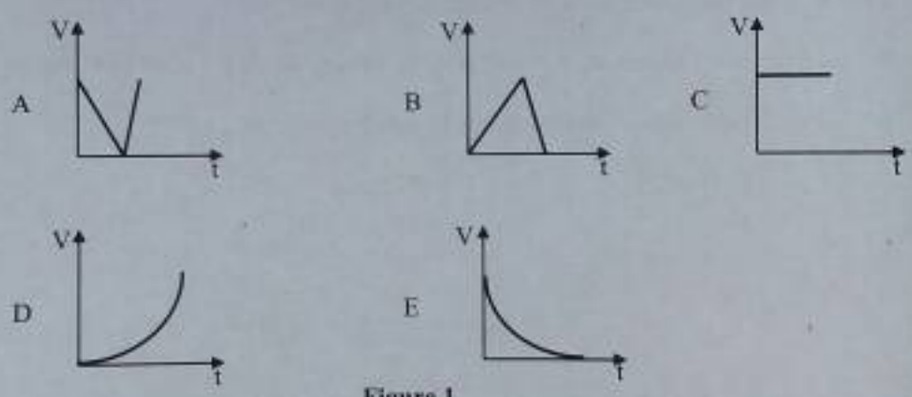

Figure 1

(v) A car moving at steady speed has a frictional force on its surface whose size depends on
A its speed only B its speed and surface area C its surface area only
D its wheel speed only E its weight only.

(vi) One of the properties of pressure in liquid when placed in a container is that, it acts;
A equally upward and downward
B perpendicular to all directions
C in all directions except downward
D in all directions except upward
E equally in all directions.

(vii) If the centre of gravity of an object is slightly disturbed by being raised and the object returns to its original position after the disturbing force is removed, the object is said to be
A neutral equilibrium
B dynamic equilibrium
C static equilibrium
D unstable equilibrium
E stable equilibrium.

(viii) The substance which does not contract when cooled from 2°C to 0 °C is
A Pure iron. B Pure oil. C Pure water. D Pure air. E Pure silver.

(ix) Which of the following metals can be used for making strong magnet?
A nickel and copper.
B steel and brass.
C cobalt and copper.
D cobalt and iron.
E steel and copper.

(x) What is kept constant when investigating a Boyle's law?
A Pressure. B Volume. C Density. D Force. E Temperature.

SECTION B (30 Marks)

Answer **all** questions in this section.

2. (a) Define 'circumference speed'.
(b) A grinding wheel has a diameter of 200mm. If it rotates at 2100rev/min, what is the circumferential grinding speed in m/s?

3. (a) List three functions which are done by a gold-leaf electroscope.
(b) Give the names of the parts of a Gold-leaf electroscope indicated by the letters A-C in Figure 2.

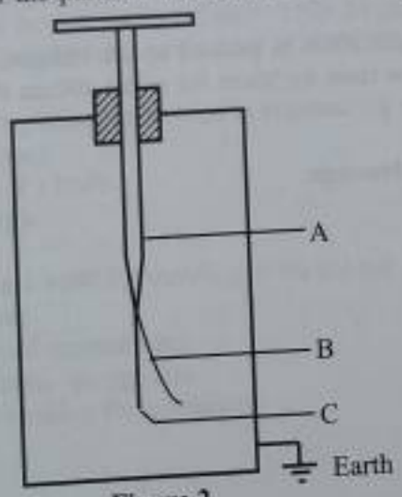

Figure 2

4. (a) What is the difference between pressure and force?
   (b) A column of mercury is 700mm high and the area of its base is $2.00cm^2$, Find the;
      (i) pressure it exerts.
      (ii) force it exerts.

5. (a) Define the term amplitude as applied in wave.
   (b) Calculate the wavelength of a radio wave of frequency 2000 kHz if the velocity of electromagnetic waves in free space is $3 \times 10^8 m/s$.

6. An object 2.5 mm tall placed 5 cm from the concave mirror produces a real image 1cm tall at 20 cm from the mirror. What is the focal length of this concave mirror?

7. Briefly, explain three advantages and three disadvantages of the friction.

8. (a) Sketch a well labeled diagram of the block and tackle pulley system having velocity ratio of 5.
   (b) Study carefully the diagrams of simple machines (i) - (ii) in Figure 3. In each diagram, indicate which is fulcrum, load and effort between a, b and c as indicated by arrows.

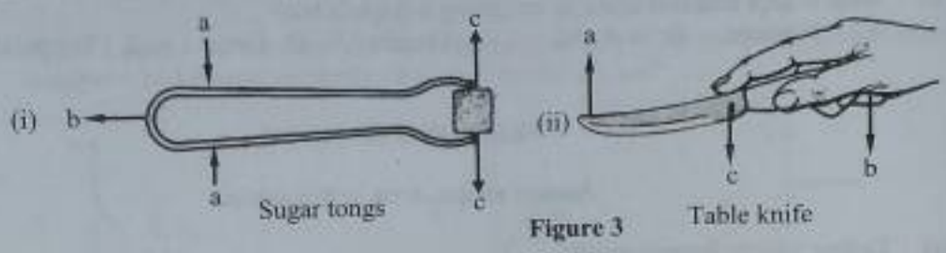

Figure 3

9. (a) Define the term density.
   (b) An object of volume $1.0\ m^3$ and density of $500kg/m^3$ floats in a liquid of density $750kg/m^3$. Calculate the volume of the liquid displaced.

10. By giving three points, briefly distinguish between mass and weight.

11. A loaded wheelbarrow of weight 800N is pushed up an inclined plane by a force of 150N parallel to the plane. If the plane rises by 50cm for every 400cm distance measured along the plane;
   (a) find the velocity ratio.
   (b) compute the mechanical advantage.

SECTION C (60 Marks)

Answer **three (3)** questions from this section.

12. (a) (i) What is 'displacement' with regards to engineering science?
    (ii) Briefly explain why *speed* differs from *velocity* while they share the same formulae and SI unit? **(3 marks)**

    (b) A car starts from rest and is accelerated uniformly at the rate of 5 m/s^2 for 10 s. It then maintains a constant speed for 1 minute. The brakes are then applied and the vehicle uniformly retarded to rest in 20 s. Find the maximum speed reached in km/h and the total distance covered in metres. **(8 marks)**

    (c) A load of 100 g is placed on an inclined plane of 45° to the horizontal. Neglecting the friction force, calculate;
    (i) in m/s^2, the acceleration of load as it slides down.
    (ii) distance it would move from rest in 0.4 seconds.
    (iii) potential energy of a load before it starts to slide. **(9 marks)**

13. (a) Differentiate temperature and heat with respect to engineering science. **(2 marks)**

    (b) A 50 W heating coil is totally immersed in 100 g of water contained in an insulated flask of negligible heat capacity.
    (i) If the temperature of the water is 20°C when the heater is switched on, how long would it take for the water to boil?
    (ii) After the water has been boiling for 15 minutes it is found that, the mass of water in the flask has decreased to 80g. Assuming no external heat losses, calculate a value for the specific latent heat of vaporization of water. **(10 marks)**

    (c) (i) What is the difference between latent heat and specific heat capacity of a substance. State their SI units. **(3 marks)**
    (ii) Calculate the heat required to change 2 g of ice at - 6 °C into steam at 100°C given that, specific heat capacity of ice = 2100 J/kgK, specific heat capacity of water = 4200 J/kgK, and specific latent heat of ice = 336000 J/kg. **(5 marks)**

14. (a) Define the following concepts as used in engineering science:
    (i) Inertia of a body.
    (ii) Momentum of a body. **(3 marks)**
    (iii) Kinetic energy.

    (b) A motor car of mass 1000 kg traveling at 90 km per hour is brought to rest by the brakes in 100 m. Compute:
    (i) the car's initial momentum;
    (ii) its initial kinetic energy; and **(7 marks)**
    (iii) the average braking force required.

(c) (i) Define the 'linear expansivity' of a substance.

(ii) What is the difference between pressure law and Charles law with regard to gas laws?

(iii) The difference in length between a brass and an iron rod is 14 cm at 10 °C. What must be the length of the iron for this difference to remain at 14cm when both rods are heated to 100 °C? (Linear expansivity of brass = 19×10^{-6}/K, of iron = 12×10^{-6}/K.). **(10 marks)**

5. (a) State the following law and rule with regards to electricity and magnetism.

(i) Ohm's law. **(3 marks)**

(ii) Fleming's left-hand rule.

(b) Figure 4 shows an electric circuit, Find:

(i) Total current of the circuit,

(ii) Voltage of V_1 and V_2, **(12 marks)**

(iii) An electric current in Ammeter A_1 and A_2.

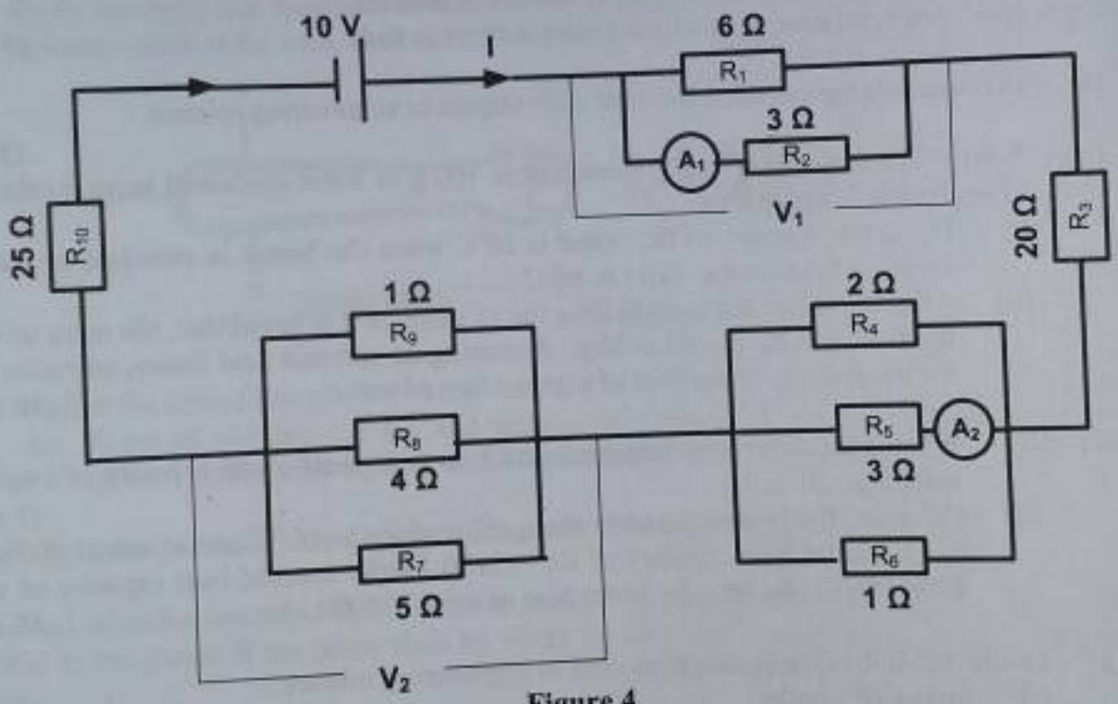

Figure 4

(c) A medium house with a main supply at 250V has two 2kW electric heaters and six 100 W lamps. The power and lighting circuit are entirely separate, and each has its own main fuse. What current passes through each of the fuses when both heaters and all the lamps are in use? Calculate the total resistance. **(5 marks)**

16. (a) (i) Define resultant force.
(ii) Differentiate Scalar and vector quantities.
(iii) State the principle of parallelogram of forces. **(4 marks)**

(b) With the aid of sketch (es) resolve the following forces of 250 N, 200 N and 150 N acting at 60°, 120° and 330° respectively to the horizontal, into their horizontal and vertical components and calculate the resultant force. **(8 marks)**

(c) A uniform wooden lath AB, 150cm long and weighing 1.5 N rests on two sharp-edged supports C and D placed 20 cm from each end of the lath respectively. A 0.4 N weight hangs from a loop of thread 40 cm from A and a 0.9 N weight hangs similarly 50 cm from B. Draw a clear – diagram of the arrangement and calculate the reactions at the supports. **(8 marks)**