THE UNITED REPUBLIC OF TANZANIA
NATIONAL EXAMINATIONS COUNCIL
CERTIFICATE OF SECONDARY EDUCATION EXAMINATION

097 MECHANICAL DRAUGHTING
(For Both School and Private Candidates)

TIME: 3 Hours 9 November 2000 P.M.

Instructions

1. This paper consists of SIX (6) questions.
2. Attempt question number 1 and any other THREE (3) questions.
3. Question number 1 carries 40 marks while others carry 20 marks each.
4. Write your Examination Number on every page of your answer booklet(s).

MAKTABA
UKUNGUDI - ZANZIBAR

This paper consists of 5 printed pages

Find more free educational resources at:
http://maktaba.tetea.org

SECTION A (40 marks)

1. Fig. 1 shows a detail from a stationary engine. Using four times full-size, draw in third angle projection the given detail with parts assembled together.

   (a) A sectional front elevation in the direction of arrow B. The section should be parallel to the sides of the rod and pass through the centre of the hinge bolt.

   (b) A plan in the direction of arrow A and projected from the elevation. Show all hidden details in this view.

   Note: (i) The smallest diameter spigot on the bolt should be shown threaded M10 for M15 mm, and the bolt should be fastened by an M10 nut.

   (ii) Six main dimensions should be added to the views.

   (iii) Print the title "SAFETY VALVE OPERATING LINK DETAIL" at the bottom right-hand corner of your sheet in 6 mm letters.

   (iv) At the bottom-left hand corner of the sheet, print the type of projection used.

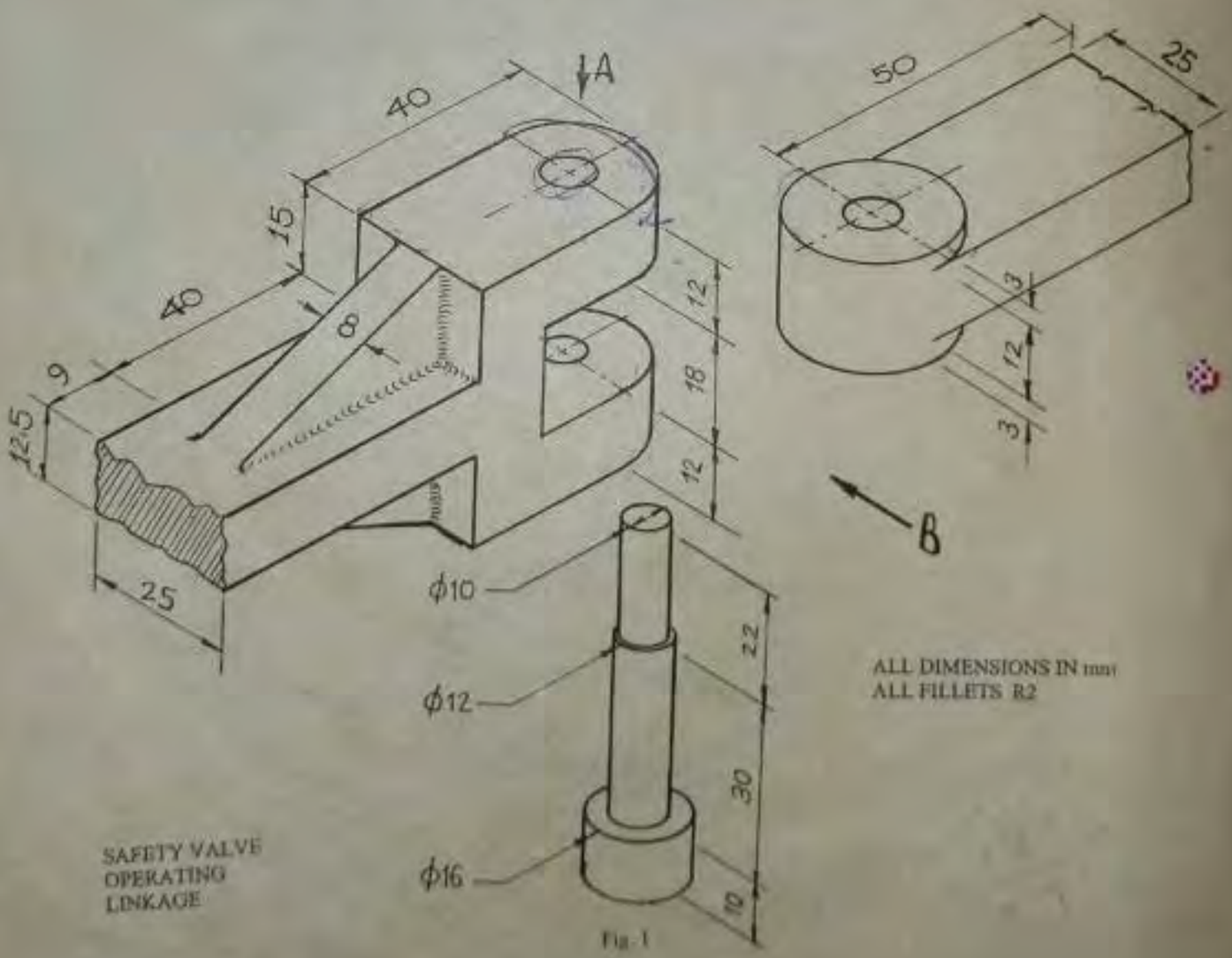

Fig. 1

and more free educational resources at:
http://maktaba.tetea.org

2. Figure 2 below shows two views of a machine casting.

(a) Draw, using full-size scale

(i) the given front elevation

(ii) a sectional elevation in the direction of arrow AA

(b) indicate the type of sectioning used

(c) print the type of angle used in the projection.

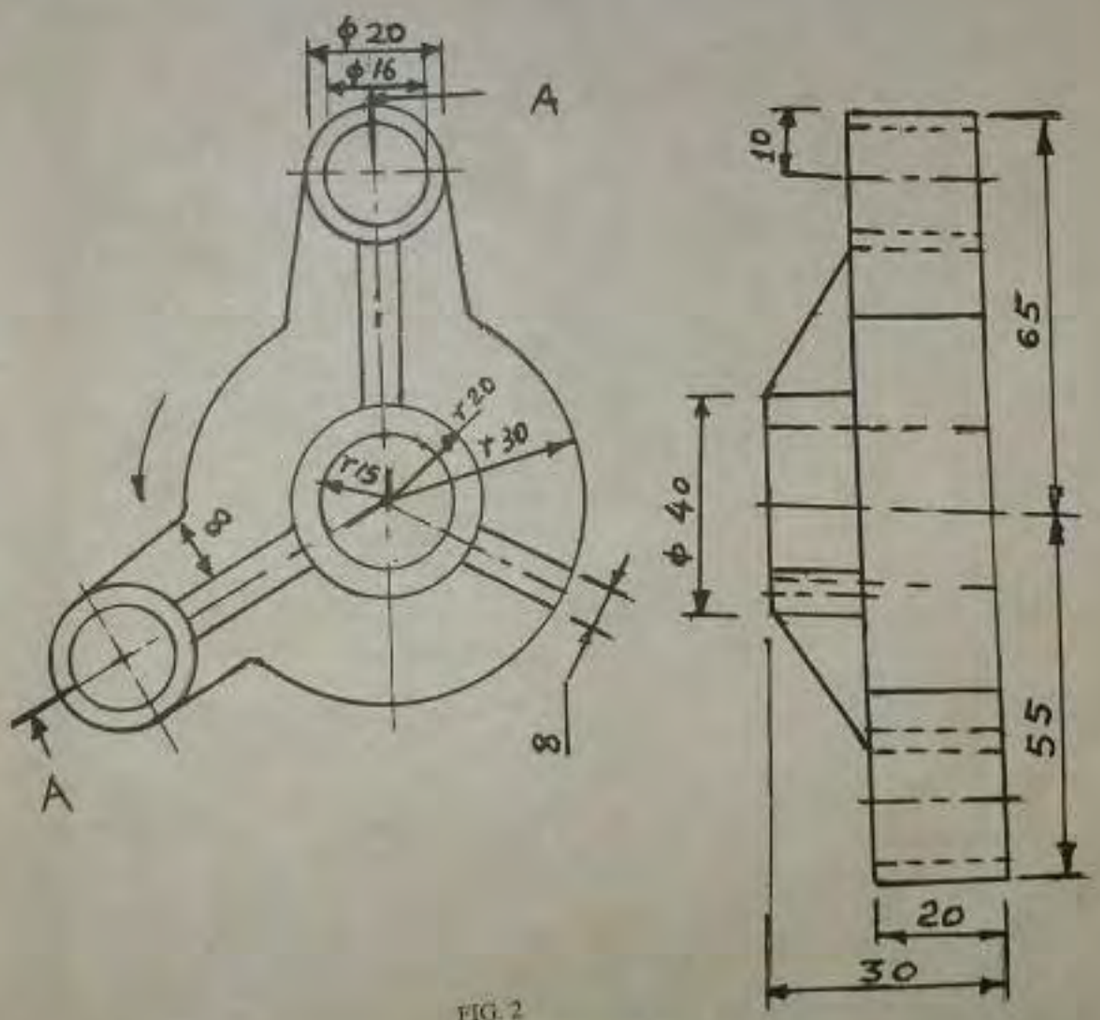

FIG. 2

MAKTABA

Find more free ... ces at:
http://maktaba.tetea.org

3. Fig. 3 below shows a BRACKET drawn in first angle projection. Draw the bracket in ISOMETRIC projection.

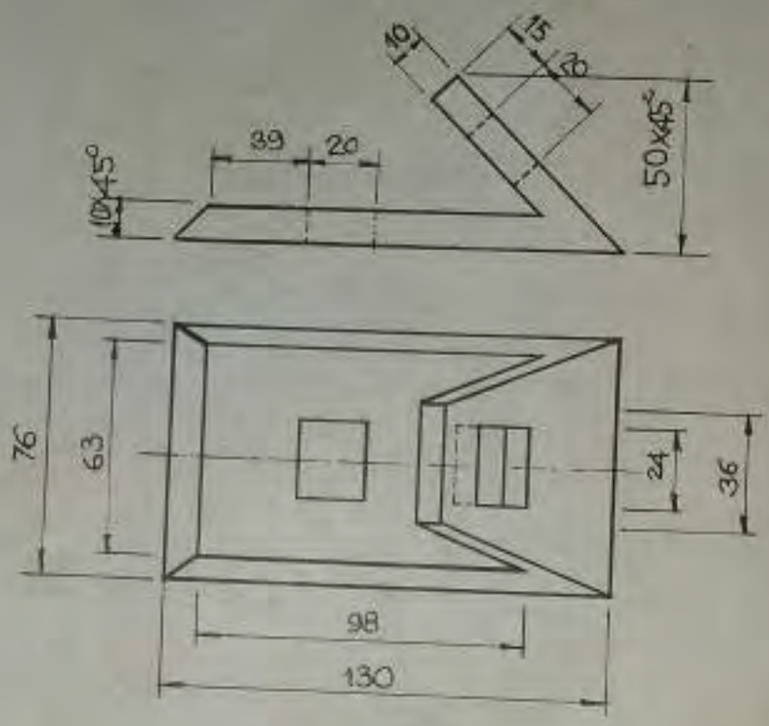

BRACKET

Fig. 3.

4. Using neat sketches, show how the following features are dimensioned:
   (a) Blind holes
   (b) Spot faces
   (c) Through holes
   (d) A group of holes.
   (e) Counter sink.
   (f) Counter bores.
   (g) All chamfers
   (h) Undercuts

5. One end of a string whose length is equal to the circumference of a cylinder is attached to a point on the cylinder. The diameter of the cylinder is 46 mm.
   (a) Draw the path of the free end of the string when it is wound round the cylinder in a plane perpendicular to the axis of the cylinder.
   (b) In block letters, name the curve produced.

Find more free educational resources at:
http://maktaba.tetea.org

(c) From a point 56 mm chord length, from the end of the curve (i.e. from the free end of string), construct a tangent to the circle representing the cylinder.

6. Fig. 4 shows a cylinder 50 mm diameter and 70 mm high. It intersects at right angles with another cylinder of 40 mm diameter. Draw the curve of penetration and the development of the smaller cylinder joining along A – B.

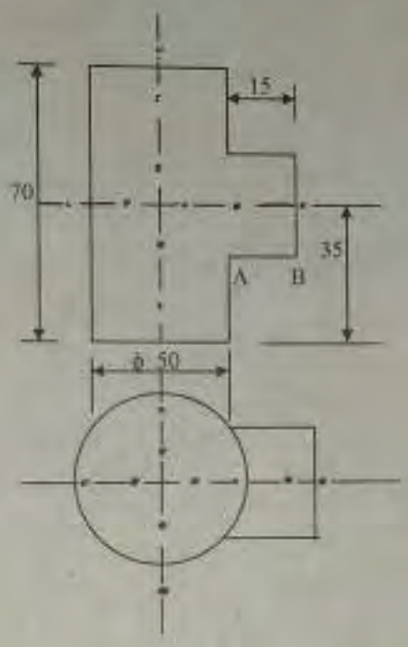

Fig. 4

MAKTABA
MNAZI MMMOJA, ZANZIBAR

Find more [illegible] resources at:
http://maktaba.tetea.org