THE UNITED REPUBLIC OF TANZANIA
NATIONAL EXAMINATIONS COUNCIL
CERTIFICATE OF SECONDARY EDUCATION EXAMINATION

097

MECHANICAL DRAUGHTING

(For both School and Private Candidates)

Time: 3 Hours **Wednesday, 13th October 2010 a.m.**

Instructions

1. This paper consists of **six (6)** questions.
2. Answer question **number 1** and any other **three (3)** questions.
3. Question number 1 carries 40 marks while the others carry 20 marks each.
4. Calculators are **not** allowed in the examination room.
5. Cellular phones are **not** allowed in the examination room.
6. Write your **Examination Number** on every page of your answer booklet(s).

This paper consists of 5 printed pages.

Find more free educational resources at:
http://maktaba.tetea.org

1. Figure 1 shows the INSULATOR BRACKET. Draw the following views in third angle projection.

(a) The sectional front elevation taken on the cutting plane A-A.

(b) An end elevation.

(c) A plan showing cutting plan A-A.

Use scale 1:1

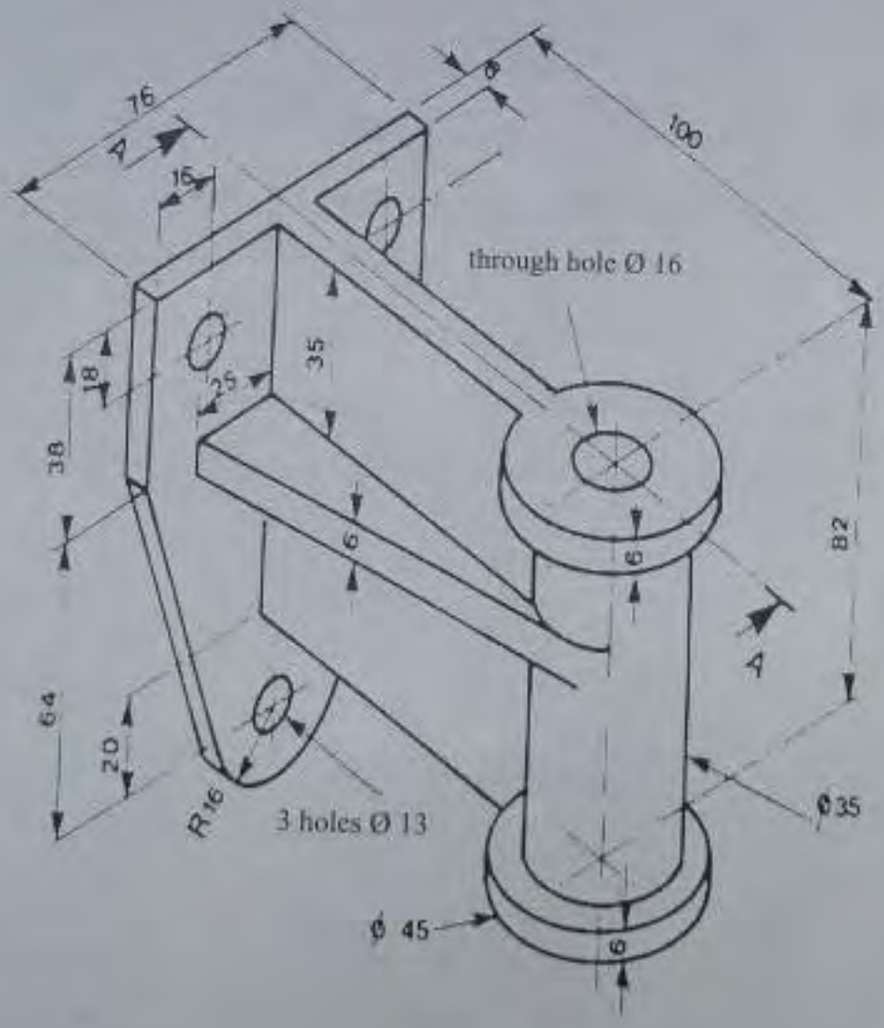

Figure 1

Educational resources at:
http://maktaba.tetea.org

2. Figure 2 shows the elevation of CRANE HOOK. Draw the elevation showing clearly the various constructions used to position the centre of arcs.

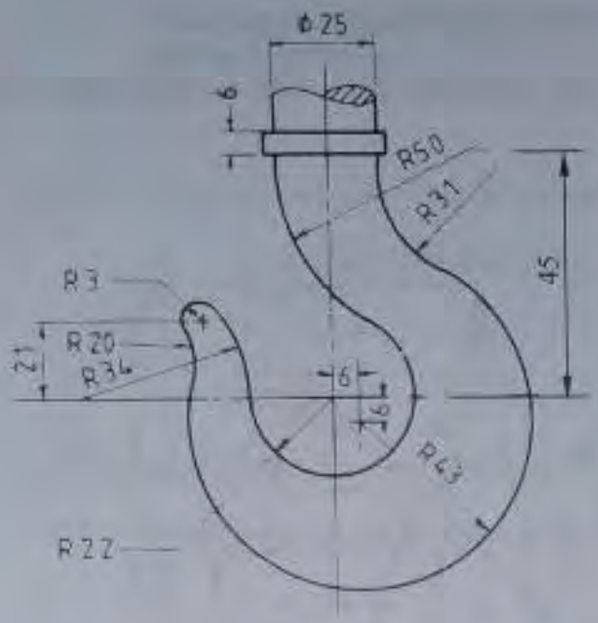

Figure 2

3. The crank OA of the mechanism Figure 3 rotates clockwise at constant speed about O. During one revolution of the crank point E moves from C to D and back to C at a constant speed along CD. Draw the locus of B during one revolution of OA. Length OA = 25 mm.

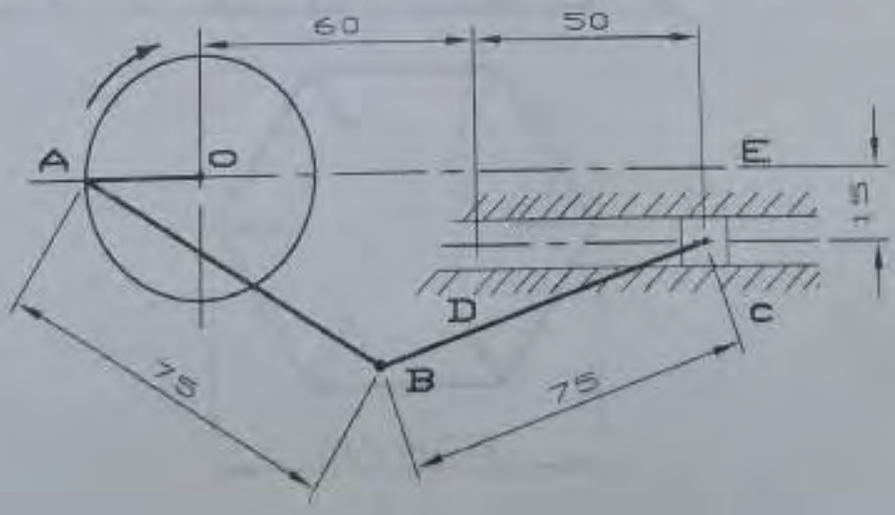

Figure 3

Find more free educational resour
http://maktabo.tetea.org

4. Figure 4 shows two views of a truncated hexagon pyramid in first angle projection, draw the

(a) given views.

(b) complete plan showing the section of truncated area.

(c) auxiliary view in the direction of arrow A. Do not show hidden details in this view.

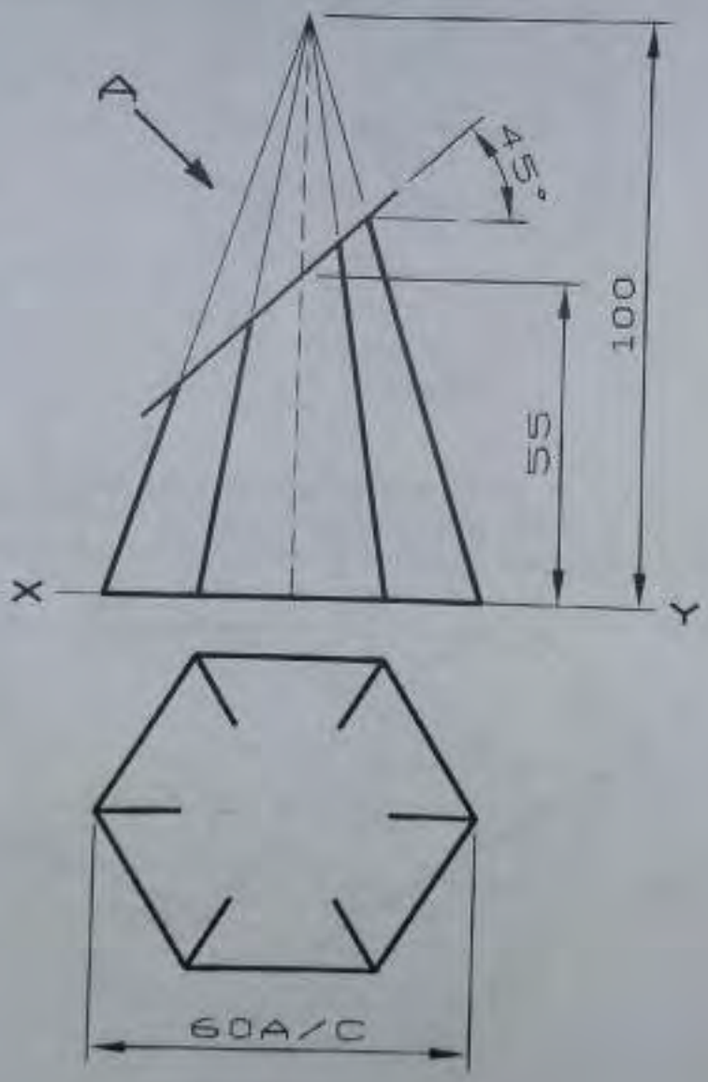

Figure 4

Find more free educational resources at:
http://maktaba.tetea.org

5. (a) Construct an ellipse by using the rectangular method if the major axis is 90 mm and minor axis is 50 mm. Show all the constructions clearly.

(b) Distinguish between Isometric projection and Oblique projection as far as pictorial drawing is concerned.

6. (a) Define the following terms as applied in mechanical engineering:

(i) Representative fraction (R.F) or scale factor (S.F)
(ii) Basic size
(iii) Nominal size
(iv) Dimension
(v) Deviation

(b) Mention five (5) pieces of information which are contained in the title block.

(c) What are the uses of the following types of lines?

(i) Extension line
(ii) Dashed thick
(iii) Chain thick
(iv) Hatching line
(v) Continuous thin with zigzags

Find more free educational resources at
http://maktaba.tetea.org