THE UNITED REPUBLIC OF TANZANIA
NATIONAL EXAMINATIONS COUNCIL
CERTIFICATE OF SECONDARY EDUCATION EXAMINATION

083 **RADIO AND TV SERVICING**
(For both School and Private Candidates)

Time: 3 Hours **Monday, 18th October 2010 a.m.**

Instructions

1. This paper consists of sections A, B and C.
2. Answer **all** questions in sections A and B and **three (3)** questions from section C.
3. Calculators are **not** allowed in the examination room.
4. Cellular phones are **not** allowed in the examination room.
5. Write your **Examination Number** on every page of your answer booklet(s).

This paper consists of 8 printed pages.

SECTION A (10 Marks)

Answer **all** questions in this section.

1. For each of the items (i) – (x), choose the correct answer from among the given alternatives and write its letter beside the item number.

(i) In the n-p-n transistor under forward biased condition p - layer is extremely thin because
- A the material used for p-type semiconductor is very costly.
- B the p-type semiconductor requires more energy to disturb the electrons in the valence band.
- C 90% electrons can be collected at the collector.
- D 90% electrons can be controlled at the emitter.
- E movement of electrons towards the junction is seized.

(ii) Which of the following displays has minimum power consumption?
- A Light emitting diode (LED)
- B Liquid crystal display (LCD)
- C Nixie tube
- D Fluorescent lamps
- E Gas filled tubes.

(iii) If one wishes to amplify the potential difference between two points in a circuit when neither of these points is grounded, which of the following amplifier will be used?
- A RC coupled amplifier
- B Transformer coupled amplifier
- C Differential amplifier
- D Audio power amplifier
- E Direct-coupled amplifier.

(iv) Which of the following statement is true?
- A L-type filter with series C and shunt L is low pass filter
- B π-type filter with series C and shunt L is low pass filter
- C T-type filter with series C and shunt L is low pass filter
- D L-type filter with series C and shunt C is low pass filter
- E K-type filter with series C and shunt L is low pass filter.

(v) Which of the following diodes has almost zero minority carrier storage time?
- A Rectifier
- B Schottky
- C PIN
- D Zener
- E Tunnel.

(vi) Which wave predominates at large distance above the earth?

A Ground wave
B Sky wave
C Space wave
D Both sky wave and ground wave
E Ground wave or space wave.

(vii) Which of the following oscillator is expected to give highest Q-factor?

A Crystal controlled oscillator
B Tuned oscillator
C Wein bridge oscillator
D Colpitts oscillator
E Hartley oscillator.

(viii) What is the name of the transformer's coil into which voltage is induced?

A Step down transformer
B Primary winding
C Secondary winding
D Induction coil
E Turn's ratio coil.

(ix) A silicon controlled rectifier (SCR) is a

A unijunction device
B device with three junctions
C a device with four junctions
D a combination of diac and triac
E PNPN device.

(x) Which of the following is not a correct relationship between α and β?

A $\beta = \frac{\alpha}{1-\alpha}$

B $\alpha = \frac{\beta}{1-\beta}$

C $\alpha = \frac{\beta}{1+\beta}$

D $1-\alpha = \frac{1}{1+\beta}$

E $1+\beta = \frac{1}{1-\alpha}$

SECTION B (30 Marks)

Answer **all** questions in this section.

2. Two capacitors C_1 and C_2 are connected in parallel across two points of p.d V volts. Calculate the:

   (a) Equivalent capacitance, C of the circuit.

   (b) Energy E, stored in the equivalent capacitance, C.

3. (a) What is the difference between BJT and JFET?

   (b) What happens if you interchange the polarities of electrolytic capacitor in a rectifier circuit?

4. (a) What do you understand by the terms *'frequency'* and *'amplitude'* as applied in a sine wave?

   (b) Calculate the frequency of an electromagnetic wave when travelling in free space if it has a wavelength of

   (i) 3 cm

   (ii) 1000 cm

   (iii) 200 m

5. Find the current in the circuit shown in Figure 1 .Assume an ideal diode.

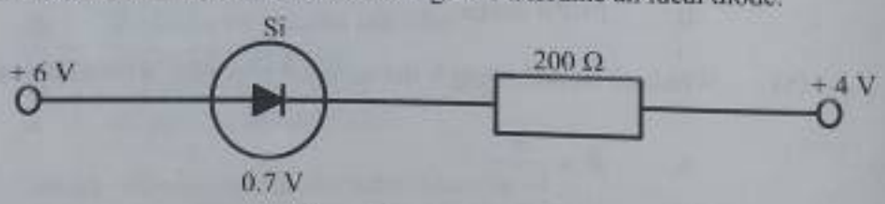

Figure 1

6. (a) What is the *'resonant frequency'* of a tuned circuit of an oscillator?

   (b) If a tuned circuit has L = 58.6 μH and C = 300 pF. Calculate the frequency of oscillation.

7. Mention three (3) advantages of using an integrated circuit (ICs)?

8. For a R-L-C series circuit in which R = 10 Ω, L = 100 μH and C = 100 pF, Calculate the:

(a) Resonant frequency (f_r).

(b) Impedance (Z) of the circuit at resonance.

(c) Q – factor of the circuit.

9. (a) If the amplitude of the radio frequency is 10 mV and that of the carrier wave is 20 mV, determine the modulation depth.

(b) Mention two (2) types of modulation.

10. (a) In the atomic structure of a semiconductor, which energy band do free electrons exist?

(b) How are holes created in an intrinsic semiconductor?

(c) Why is current more easily established in a semiconductor than in an insulator?

11. Determine the peak value of the output voltage for the circuit shown in Figure 2.

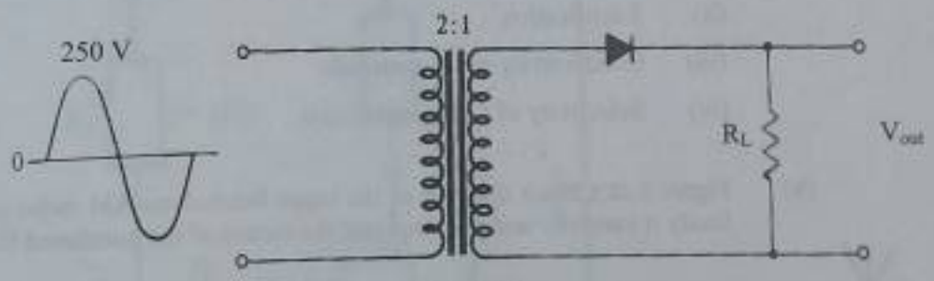

Figure 2

SECTION C (60 Marks)

Answer **three (3)** questions from this section.

12. (a) Define the following terminologies.
    - (i) Electron gun
    - (ii) Phosphor
    - (iii) Interlacing
    - (iv) Chrominance
    - (v) Raster

    (b) (i) Mention two (2) types of deflection system applied in the cathode ray tube (CRT).

    (ii) List down three (3) primary colours as applied in the colour television.

    (iii) Explain the term *'amplifier gain'* as applied in the electronic circuit.

13. (a) Explain the following terms as applied in electronics.
    - (i) Transducer
    - (ii) Rectification
    - (iii) Conductivity of the material
    - (iv) Selectivity of a resonant circuit

    (b) Figure 3 is a block diagram of the super heterodyne AM radio receiver. Study it carefully and then indicate the names of the numbered blocks.

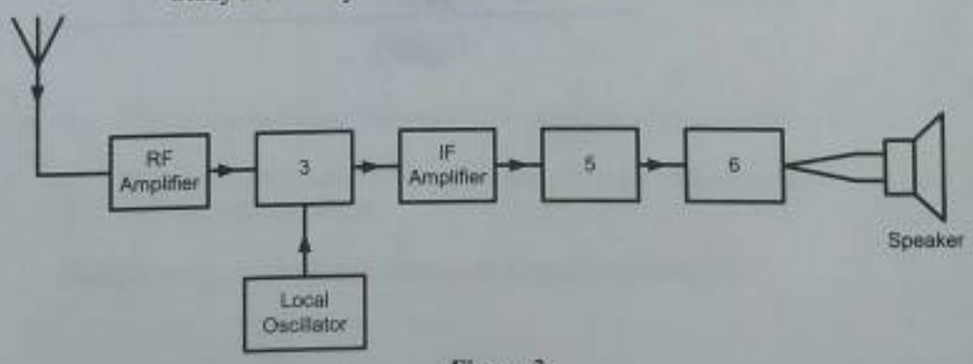

Figure 3

14. An amplifier circuit consists of an NPN transistor, power supply +Vcc is biasing resistor R_1 and R_2 (potential divider method), collector resistor Rc, emitter resistor R_E and capacitor C_1.

(a) Draw the circuit diagram of the amplifier.

(b) Write the equation of the load line.

15. (a) Explain the meaning of the following terms in connection with amplifiers.

(i) Saturation point

(ii) Cut-off point.

(b) Study Figure 4 careful then calculate the following values at cut-off point.

(i) Collector-emitter voltage, V_{CE}

(ii) Collector current, Ic.

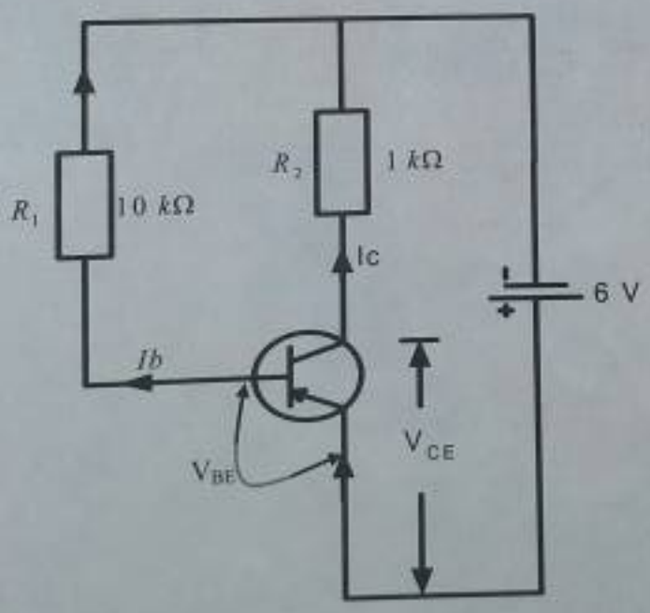

Figure 4

16. (a) Explain the term *television*.

(b) Give the speed of television waves in free space.

(c) A wavelength of television antenna must be equal to half the wavelength of the signal received. Calculate the length of antenna when the television receiver is tuned to a television station transmitting at 300 MHz.