THE UNITED REPUBLIC OF TANZANIA
NATIONAL EXAMINATIONS COUNCIL OF TANZANIA
DIPLOMA IN TECHNICAL EDUCATION EXAMINATION

782 **ARCHITECTURAL DRAWING**

(SUPPLEMENTARY)

Time: 3 Hours **Year: 2020**

Instructions

1. This paper consists of sections A and B with a total of **six (6)** questions.
2. Answer question number **one (1)** in section A and **four (4)** questions from section B.
3. All drawings should be in pencil and drawings in section A should be prepared in **A3 Standard Paper** format.
4. Question 1 carries **forty (40)** marks and the rest carry **fifteen (15)** marks each.
5. Communication devices, programmable calculators and any unauthorised materials are **not** allowed in the examination room.
6. Write your **Examination Number** on every page of your answer booklet(s).

2 014782 100016

Find this and other free educational materials at:
https://maktaba.tetea.org

SECTION A (40 Marks)

Answer question **one (1)** in this section.

1. The school has officially acquired a new classroom after the completion of construction period. Figure 1 is a floor plan showing the functional spaces, including class room and store with their respective dimensions. The gable roof is used with a pitch of 30° and the eave of 700mm. The headroom of a class is 3800mm with wall thickness of 230mm.

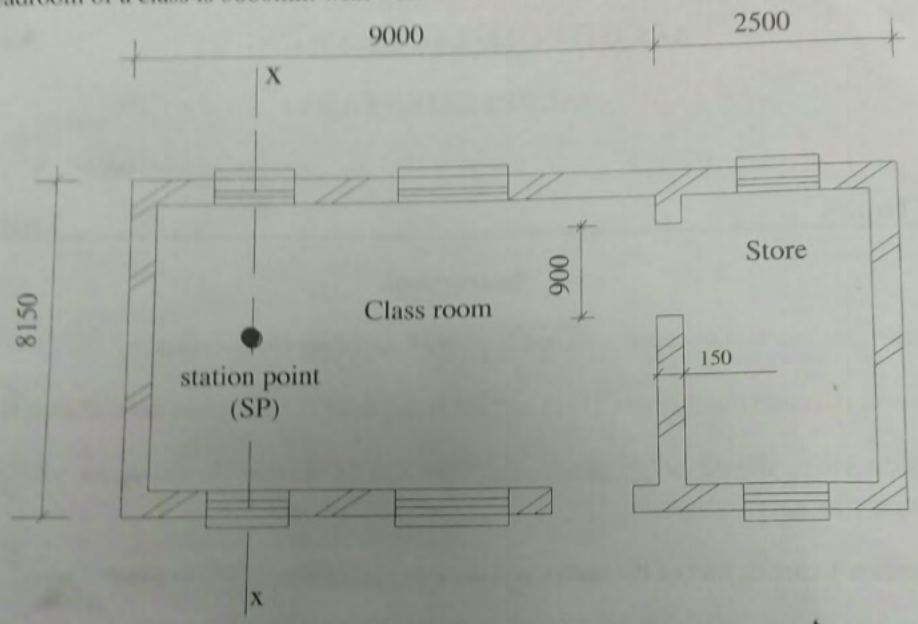

Figure 1: Floor Plan

Using the scale of 1:50, draw the following:

(a) One point perspective taken through line X-X as shown on the floor plan inside the classroom.

(b) A section X-X with all engineering details.

SECTION B (60 Marks)

Answer **four (4)** questions from this section.

2. (a) When using architectural lettering there are standards of spacing. Identify the recommended space in each of the following situations:

   (i) Between each word in a sentence

   (ii) Between letters in a word

   (iii) Between lines of lettering in a phrase.

   (b) Why is single stroke commercial gothic letters is adopted in architectural drawing?

Find this and other free educational materials at:
https://maktaba.tetea.org

(c) Mention six important points distinguishing good lettering in architectural drawings.

3. Using five points, explain the aim of a good style of single stroke lettering.

4. Sketch and explain the uses of the following lines as applied in Architectural drawing:
   (i) Object line
   (ii) Center line
   (iii) Leaders
   (iv) Cutting plane lines
   (v) Hidden line

5. Why is it necessary for an architect to study technical drawing? Explain by giving five reasons.

6. From the given Figure 2, draw it in First Angle Projection assuming that the front elevation is in the direction of A, end elevation in the direction of B and plan elevation. Use scale of 1:1.

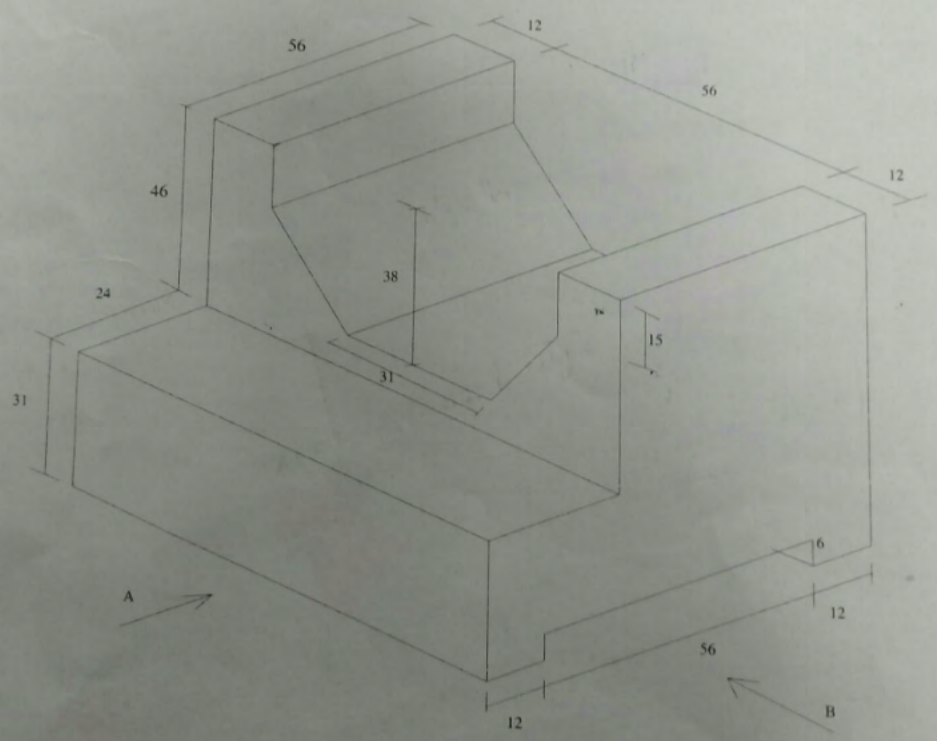

Figure 2

Find this and other free educational materials at:
https://maktaba.tetea.org