THE UNITED REPUBLIC OF TANZANIA
NATIONAL EXAMINATIONS COUNCIL
DIPLOMA IN SECONDARY EDUCATION EXAMINATION

731/2A **PHYSICS 2A**

(ALTERNATIVE A PRACTICAL)

Time: 3 Hours *Thursday, 13th May 2010 a.m.*

Instructions

1. This paper consists of **three (3)** questions.
2. Answer **all** questions.
3. Question number one carries 40 marks, question number two and three carries 30 marks each.
4. Mathematical tables and Scientific Calculators (fx 82 - 99 I) may be used.
5. Cellular phones are **not** allowed in the examination room.
6. Write your **Examination Number** on every page of your answer booklet(s).
7. The following constants may be used.
   - $\pi = 3.14$,
   - Specific heat capacity of Cooper is 400 J/Kg °C,
   - Specific heat capacity of water is 420 J/Kg °C,
   - Acceleration due to gravity; $g = 10\ m/S^2$.

Find this and other free resources at:
https://maktaba.tetea.org

Scanned by CamScanner

Find this and other free resources at: https://maktaba.tetea.org

1. The aim of this experiment is to determine the radius of gyration, K of the triangular sheet of cardboard.

Apparatus and Diagram:

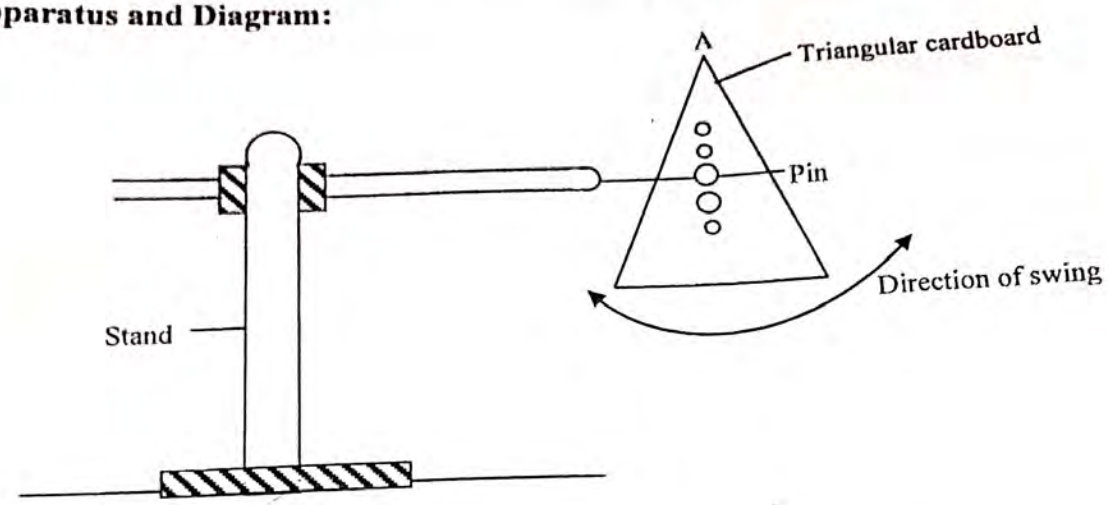

Procedures:

(a) Using the weighted string (plumb line) provided, locate the centre of gravity G of the triangular sheet of cardboard. Explain with the help of diagram how you locate G.

(b) Draw a line through G and the furthest angle (apex) A of the cardboard. Measure a distance of 2 cm from G along the line GA. Make a hole at this point. Make five other holes along GA, a distance of 2 cm from each other.

(c) Set up the apparatus as shown above. Suspend the triangular cardboard from a hole nearest the centre of gravity G. Record **h** which is the distance of the point of suspension from G. With a stopwatch obtain the time **t** from 10 oscillations of the cardboard and hence determine the period T. Repeat the above procedure with five other values of **h** to obtain corresponding values of t and T.

Plot a graph of h^2 against T^2h, given that $T^2h = \frac{4\pi^2}{g}(k^2 + h^2)$.

Determine with the aid of your graph

(i) the acceleration g, due to gravity.

(ii) the radius of gyration, **K**.

Mention any source of errors.

Find this and other free resources at:
https://maktaba.tetea.org

Scanned by CamScanner

Find this and other free resources at: https://maktaba.tetea.org

2. The aim of this experiment is to determine the rate of cooling of liquid A.

Diagram:

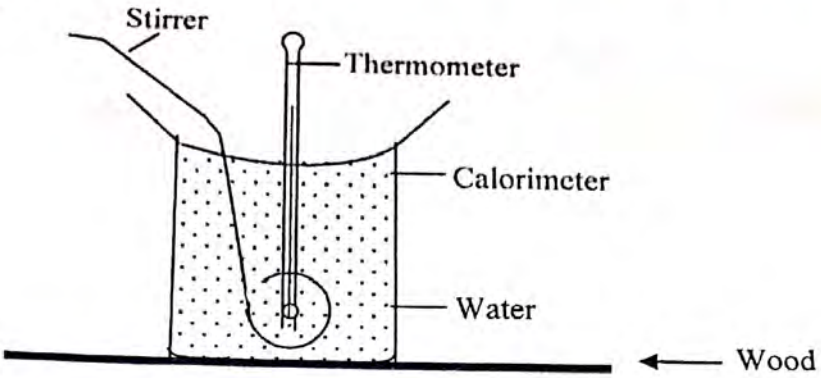

Procedures:

You are provided with a small calorimeter, stirrer, thermometer, beaker and stopwatch.

(a) Read and record the temperature θ_o of the room.

(b) Put some water in a beaker and leave it to heat on the bunsen burner. While the water is being heated, put the colorimeter and stirrer on a wooden base as shown in the diagram above. When the temperature of water in the beaker reaches about 80°C transfer some of it to the calorimeter till the level of water in the calorimeter reaches to above one third from the top of the calorimeter.

(c) Read and record the temperature **0 °C** and start the stopwatch simultaneously so as to enable you record the time (t) seconds, while stirring gently and fanning the calorimeter with some paper.

(d) Record the temperature after every time interval of 2 minutes. Continue doing this for about 18 minutes.

(e) Plot a graph of $\log_{10}(\theta - \theta_o)$ against time **t**. Determine the shape of the graph.

(f) The theory of the experiment obeys relation $\log_{10}(\theta - \theta_o)$, where w is the water equivalent of calorimeter and contents; and **k** is constant. What is the physical meaning of the constant **k**?

Find this and other free resources at:
https://maktaba.tetea.org

Scanned by CamScanner

Find this and other free resources at https://maktaba.tetea.org

3. The aim of this experiment is to verify the ohms' law.

Diagram:

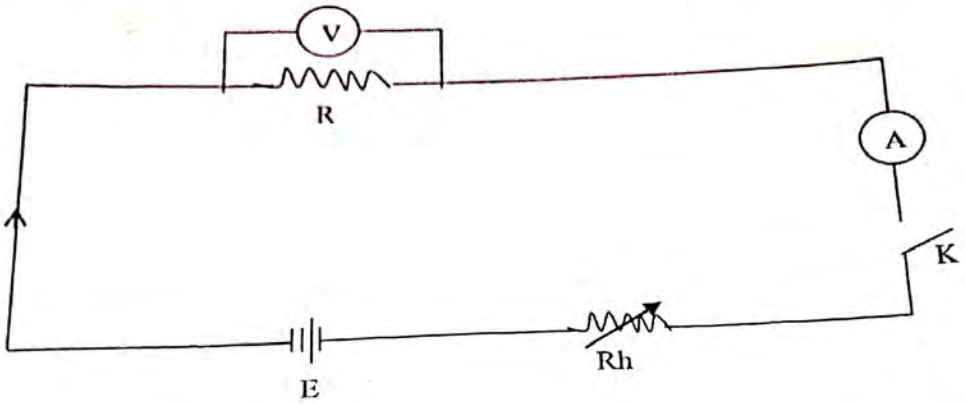

Procedures:

(a) Set up the apparatus as shown in the diagram above.

(b) Close the switch **K**.

(c) Adjust the rheostat **Rh** by sliding slowly from one end.

(d) Read and record values of voltage **V** and current **I** from the voltmeter and ammeter readings respectively.

(e) Repeat the experiment by changing the position of a slide of a rheostat from five (5) different positions.

(f) Always adjust the rheostat until the ammeter points are exactly on the division of the meter scale before taking the readings.

(g) Tabulate results as follows:

Volts (V)					
Current (A)					

(h) (i) Plot a graph of **V** against **I**.

(ii) Is the graph linear or curve?

(iii) Find the slope(s).

(iv) Compare the relationship of voltage (**V**) and current (**I**).

Find this and other free resources at:
https://maktaba.tetea.org

Scanned by CamScanner